PathFinder Energy Services

PathFinder X & Y Report

Company:	Bois D'Arc Offshore	Date: 10/20/2003 Time: 08:55:29	Page: 1
Field:	South Marsh Island	Co-ordinate(NE) Reference:	Well: OCS-G 22648 Well #1, Grid North
Site:	SMI 220 #1	Vertical (TVD) Reference:	SITE 100.0
Well:	OCS-G 22648 Well #1	Section (VS) Reference:	Well (0.00N,0.00E,87.64Azi)
Wellpath:	OH	Survey Calculation Method:	Minimum Curvature Db: Sybase

Plan:	Plan #5	Date Composed:	10/16/2003
		Version:	1
Principal:	Yes	Tied-to:	From Surface

Field:	South Marsh Island		
Map System:	US State Plane Coordinate System 1927	Map Zone:	Louisiana, Southern Zone
Geo Datum:	NAD27 (Clarke 1866)	Coordinate System:	Well Centre
Sys Datum:	Mean Sea Level	Geomagnetic Model:	igrf2000

Site:	SMI 220 #1 220 South Marsh Island								
Site Position:			Northing:	261682.82 ft	Latitude:	29	23	1.055	N
From:	Map		Easting:	1735024.48 ft	Longitude:	92	9	55.092	W
Position Uncertainty:		0.00 ft			North Reference:			Grid	
Water Depth:		0.00 ft			Grid Convergence:			-0.42	deg

Well:	OCS-G 22648 Well #1				Slot Name:				
Well Position:	+N/-S	0.00 ft	Northing:	261682.82 ft	Latitude:	29	23	1.055	N
	+E/-W	0.00 ft	Easting :	1735024.48 ft	Longitude:	92	9	55.092	W
Position Uncertainty:		0.00 ft							

Wellpath:	OH			Drilled From:	Surface
				Tie-on Depth:	0.00 ft
Current Datum:	SITE	Height	100.00 ft	Above System Datum:	Mean Sea Level
Magnetic Data:	10/16/2003			Declination:	2.23 deg
Field Strength:	48632 nT			Mag Dip Angle:	59.50 deg

Vertical Section:	Depth From (TVD) ft	+N/-S ft	+E/-W ft	Direction deg
	0.00	0.00	0.00	87.64

Casing Points

MD ft	TVD ft	Diameter in	Hole Size in	Name
320.00	320.00	36.000	36.000	36" Drive Pipe
800.00	800.00	16.000	21.000	16" Casing
3000.00	3000.00	10.750	12.250	10 3/4" Casing

Targets

Name	Description Dip.	Dir.	TVD ft	+N/-S ft	+E/-W ft	Map Northing ft	Map Easting ft	<— Latitude —> Deg	Min	Sec	<— Longitude —> Deg	Min	Sec	
Target -Circle (Radius: 100) -Plan hit target			9588.00	115.18	2792.52	261798.00	1737817.00	29	23	2.394	N 92	9	23.538	W

Plan Section Information

MD ft	Incl deg	Azim deg	TVD ft	+N/-S ft	+E/-W ft	DLS deg/100ft	Build deg/100ft	Turn deg/100ft	TFO deg	Target
0.00	0.00	87.64	0.00	0.00	0.00	0.00	0.00	0.00	0.00	
3000.00	0.00	87.64	3000.00	0.00	0.00	0.00	0.00	0.00	0.00	
4258.32	25.17	87.64	4218.24	11.21	271.70	2.00	2.00	0.00	87.64	
10191.24	25.17	87.64	9588.00	115.18	2792.52	0.00	0.00	0.00	0.00	Target
10867.43	25.17	87.64	10200.00	127.03	3079.82	0.00	0.00	0.00	0.00	

PathFinder Energy Services
PathFinder X & Y Report

Company:	Bois D'Arc Offshore	Date: 10/20/2003 Time: 08:55:29	Page: 2
Field:	South Marsh Island	Co-ordinate(NE) Reference:	Well: OCS-G 22648 Well #1, Grid North
Site:	SMI 220 #1	Vertical (TVD) Reference:	SITE 100.0
Well:	OCS-G 22648 Well #1	Section (VS) Reference:	Well (0.00N,0.00E,87.64Azi)
Wellpath:	OH	Survey Calculation Method:	Minimum Curvature Db: Sybase

Survey

MD ft	Incl deg	Azim deg	TVD ft	Subsea ft	VS ft	N/S ft	E/W ft	DLS deg/100ft	MapN ft	MapE ft	Tool/Comment
3000.00	0.00	87.64	3000.00	2900.00	0.00	0.00	0.00	0.00	261682.82	1735024.48	10 3/4"
3100.00	2.00	87.64	3099.98	2999.98	1.75	0.07	1.74	2.00	261682.89	1735026.22	
3200.00	4.00	87.64	3199.84	3099.84	6.98	0.29	6.97	2.00	261683.11	1735031.45	
3300.00	6.00	87.64	3299.45	3199.45	15.69	0.65	15.68	2.00	261683.47	1735040.16	
3400.00	8.00	87.64	3398.70	3298.70	27.88	1.15	27.86	2.00	261683.97	1735052.34	
3500.00	10.00	87.64	3497.47	3397.47	43.52	1.79	43.49	2.00	261684.61	1735067.97	
3600.00	12.00	87.64	3595.62	3495.62	62.60	2.58	62.55	2.00	261685.40	1735087.03	
3700.00	14.00	87.64	3693.06	3593.06	85.10	3.51	85.02	2.00	261686.33	1735109.50	
3800.00	16.00	87.64	3789.64	3689.64	110.98	4.57	110.88	2.00	261687.39	1735135.36	
3900.00	18.00	87.64	3885.27	3785.27	140.21	5.78	140.09	2.00	261688.60	1735164.57	
4000.00	20.00	87.64	3979.82	3879.82	172.77	7.12	172.62	2.00	261689.94	1735197.10	
4100.00	22.00	87.64	4073.17	3973.17	208.60	8.60	208.43	2.00	261691.42	1735232.91	
4200.00	24.00	87.64	4165.21	4065.21	247.67	10.21	247.46	2.00	261693.03	1735271.94	
4258.32	25.17	87.64	4218.24	4118.24	271.93	11.21	271.70	2.00	261694.03	1735296.18	
4300.00	25.17	87.64	4255.97	4155.97	289.66	11.94	289.41	0.00	261694.76	1735313.89	
4400.00	25.17	87.64	4346.48	4246.48	332.18	13.69	331.90	0.00	261696.51	1735356.38	
4500.00	25.17	87.64	4436.99	4336.99	374.71	15.44	374.39	0.00	261698.26	1735398.87	
4600.00	25.17	87.64	4527.49	4427.49	417.23	17.19	416.88	0.00	261700.01	1735441.36	
4700.00	25.17	87.64	4618.00	4518.00	459.76	18.95	459.37	0.00	261701.77	1735483.85	
4800.00	25.17	87.64	4708.51	4608.51	502.28	20.70	501.86	0.00	261703.52	1735526.34	
4900.00	25.17	87.64	4799.02	4699.02	544.81	22.45	544.35	0.00	261705.27	1735568.83	
5000.00	25.17	87.64	4889.53	4789.53	587.33	24.20	586.83	0.00	261707.02	1735611.31	
5100.00	25.17	87.64	4980.03	4880.03	629.86	25.96	629.32	0.00	261708.78	1735653.80	
5200.00	25.17	87.64	5070.54	4970.54	672.38	27.71	671.81	0.00	261710.53	1735696.29	
5300.00	25.17	87.64	5161.05	5061.05	714.91	29.46	714.30	0.00	261712.28	1735738.78	
5400.00	25.17	87.64	5251.56	5151.56	757.43	31.21	756.79	0.00	261714.03	1735781.27	
5500.00	25.17	87.64	5342.06	5242.06	799.96	32.97	799.28	0.00	261715.79	1735823.76	
5600.00	25.17	87.64	5432.57	5332.57	842.48	34.72	841.77	0.00	261717.54	1735866.25	
5700.00	25.17	87.64	5523.08	5423.08	885.01	36.47	884.25	0.00	261719.29	1735908.73	
5800.00	25.17	87.64	5613.59	5513.59	927.53	38.22	926.74	0.00	261721.04	1735951.22	
5900.00	25.17	87.64	5704.09	5604.09	970.06	39.98	969.23	0.00	261722.80	1735993.71	
6000.00	25.17	87.64	5794.60	5694.60	1012.58	41.73	1011.72	0.00	261724.55	1736036.20	
6100.00	25.17	87.64	5885.11	5785.11	1055.10	43.48	1054.21	0.00	261726.30	1736078.69	
6200.00	25.17	87.64	5975.62	5875.62	1097.63	45.23	1096.70	0.00	261728.05	1736121.18	
6300.00	25.17	87.64	6066.13	5966.13	1140.15	46.99	1139.19	0.00	261729.81	1736163.67	
6400.00	25.17	87.64	6156.63	6056.63	1182.68	48.74	1181.67	0.00	261731.56	1736206.15	
6500.00	25.17	87.64	6247.14	6147.14	1225.20	50.49	1224.16	0.00	261733.31	1736248.64	
6600.00	25.17	87.64	6337.65	6237.65	1267.73	52.24	1266.65	0.00	261735.06	1736291.13	
6700.00	25.17	87.64	6428.16	6328.16	1310.25	54.00	1309.14	0.00	261736.82	1736333.62	
6800.00	25.17	87.64	6518.66	6418.66	1352.78	55.75	1351.63	0.00	261738.57	1736376.11	
6900.00	25.17	87.64	6609.17	6509.17	1395.30	57.50	1394.12	0.00	261740.32	1736418.60	
7000.00	25.17	87.64	6699.68	6599.68	1437.83	59.25	1436.61	0.00	261742.07	1736461.09	
7100.00	25.17	87.64	6790.19	6690.19	1480.35	61.01	1479.09	0.00	261743.83	1736503.57	
7200.00	25.17	87.64	6880.70	6780.70	1522.88	62.76	1521.58	0.00	261745.58	1736546.06	
7300.00	25.17	87.64	6971.20	6871.20	1565.40	64.51	1564.07	0.00	261747.33	1736588.55	
7400.00	25.17	87.64	7061.71	6961.71	1607.93	66.26	1606.56	0.00	261749.08	1736631.04	
7500.00	25.17	87.64	7152.22	7052.22	1650.45	68.02	1649.05	0.00	261750.84	1736673.53	
7600.00	25.17	87.64	7242.73	7142.73	1692.98	69.77	1691.54	0.00	261752.59	1736716.02	
7700.00	25.17	87.64	7333.23	7233.23	1735.50	71.52	1734.03	0.00	261754.34	1736758.51	
7800.00	25.17	87.64	7423.74	7323.74	1778.03	73.27	1776.51	0.00	261756.09	1736800.99	
7900.00	25.17	87.64	7514.25	7414.25	1820.55	75.03	1819.00	0.00	261757.85	1736843.48	
8000.00	25.17	87.64	7604.76	7504.76	1863.07	76.78	1861.49	0.00	261759.60	1736885.97	
8100.00	25.17	87.64	7695.26	7595.26	1905.60	78.53	1903.98	0.00	261761.35	1736928.46	

PathFinder Energy Services
PathFinder X & Y Report

Company:	Bois D'Arc Offshore	Date: 10/20/2003 Time: 08:55:29	Page: 3
Field:	South Marsh Island	Co-ordinate(NE) Reference:	Well: OCS-G 22648 Well #1, Grid North
Site:	SMI 220 #1	Vertical (TVD) Reference:	SITE 100.0
Well:	OCS-G 22648 Well #1	Section (VS) Reference:	Well (0.00N,0.00E,87.64Azi)
Wellpath:	OH	Survey Calculation Method:	Minimum Curvature Db: Sybase

Survey

MD ft	Incl deg	Azim deg	TVD ft	Subsea ft	VS ft	N/S ft	E/W ft	DLS deg/100ft	MapN ft	MapE ft	Tool/Comment
8200.00	25.17	87.64	7785.77	7685.77	1948.12	80.28	1946.47	0.00	261763.10	1736970.95	
8300.00	25.17	87.64	7876.28	7776.28	1990.65	82.04	1988.96	0.00	261764.86	1737013.44	
8400.00	25.17	87.64	7966.79	7866.79	2033.17	83.79	2031.45	0.00	261766.61	1737055.93	
8500.00	25.17	87.64	8057.30	7957.30	2075.70	85.54	2073.93	0.00	261768.36	1737098.41	
8600.00	25.17	87.64	8147.80	8047.80	2118.22	87.29	2116.42	0.00	261770.11	1737140.90	
8700.00	25.17	87.64	8238.31	8138.31	2160.75	89.05	2158.91	0.00	261771.87	1737183.39	
8800.00	25.17	87.64	8328.82	8228.82	2203.27	90.80	2201.40	0.00	261773.62	1737225.88	
8900.00	25.17	87.64	8419.33	8319.33	2245.80	92.55	2243.89	0.00	261775.37	1737268.37	
9000.00	25.17	87.64	8509.83	8409.83	2288.32	94.30	2286.38	0.00	261777.12	1737310.86	
9100.00	25.17	87.64	8600.34	8500.34	2330.85	96.06	2328.87	0.00	261778.88	1737353.35	
9200.00	25.17	87.64	8690.85	8590.85	2373.37	97.81	2371.36	0.00	261780.63	1737395.84	
9300.00	25.17	87.64	8781.36	8681.36	2415.90	99.56	2413.84	0.00	261782.38	1737438.32	
9400.00	25.17	87.64	8871.86	8771.86	2458.42	101.31	2456.33	0.00	261784.13	1737480.81	
9500.00	25.17	87.64	8962.37	8862.37	2500.95	103.07	2498.82	0.00	261785.89	1737523.30	
9600.00	25.17	87.64	9052.88	8952.88	2543.47	104.82	2541.31	0.00	261787.64	1737565.79	
9700.00	25.17	87.64	9143.39	9043.39	2586.00	106.57	2583.80	0.00	261789.39	1737608.28	
9800.00	25.17	87.64	9233.90	9133.90	2628.52	108.32	2626.29	0.00	261791.14	1737650.77	
9900.00	25.17	87.64	9324.40	9224.40	2671.04	110.08	2668.78	0.00	261792.90	1737693.26	
10000.00	25.17	87.64	9414.91	9314.91	2713.57	111.83	2711.26	0.00	261794.65	1737735.74	
10100.00	25.17	87.64	9505.42	9405.42	2756.09	113.58	2753.75	0.00	261796.40	1737778.23	
10191.24	25.17	87.64	9588.00	9488.00	2794.89	115.18	2792.52	0.00	261798.00	1737817.00	Target
10200.00	25.17	87.64	9595.93	9495.93	2798.62	115.33	2796.24	0.00	261798.15	1737820.72	
10300.00	25.17	87.64	9686.43	9586.43	2841.14	117.09	2838.73	0.00	261799.91	1737863.21	
10400.00	25.17	87.64	9776.94	9676.94	2883.67	118.84	2881.22	0.00	261801.66	1737905.70	
10500.00	25.17	87.64	9867.45	9767.45	2926.19	120.59	2923.71	0.00	261803.41	1737948.19	
10600.00	25.17	87.64	9957.96	9857.96	2968.72	122.34	2966.20	0.00	261805.16	1737990.68	
10700.00	25.17	87.64	10048.47	9948.47	3011.24	124.10	3008.68	0.00	261806.92	1738033.16	
10800.00	25.17	87.64	10138.97	10038.97	3053.77	125.85	3051.17	0.00	261808.67	1738075.65	
10867.43	25.17	87.64	10200.00	10100.00	3082.44	127.03	3079.82	0.00	261809.85	1738104.30	

Department of Transportation
United States Coast Guard
National Pollution Funds Center
Arlington VA 22203-1804

No. *830963 - 13*

VESSEL CERTIFICATE OF FINANCIAL RESPONSIBILITY (WATER POLLUTION)

Vessel Operator

ENSCO OFFSHORE COMPANY

has established evidence of financial responsibility, in accordance with 33 CFR 138, to meet liability under section 1002 of the Oil Pollution Act of 1990, and under section 107 of the Comprehensive Environmental Response, Compensation, and Liability Act, which may result from the operation of the vessel named below:

Name of Vessel

ENSCO 55

Effective Date: **14MAR2003**
Expiration Date: **14MAR2006**

The use of this certificate is subject to the provisions of Part 138 of Title 33 of the Code of Federal Regulations, as it is or may be amended, and the conditions on the reverse side of this certificate. This certificate is invalid if there are any erasures or alterations hereon (except permitted by 33 CFR 138), and is void if the operator named hereon is not the party responsible for operating the vessel.

Chief, Vessel Certification
National Pollution Funds Center
By Direction

DEPARTMENT OF TRANSPORTATION
UNITED STATES COAST GUARD

OMB Approval 2115-0504

CERTIFICATE OF COMPLIANCE

Particulars of Ship:

Name of Vessel:	IMO Number:	Flag of Vessel:
ENSCO 55	CG026168	PANAMANIAN

Owner:	Operator Manager:
ENSCO Offshore 620 Moulin Road Broussard, LA 70518	ENSCO Offshore 777 N. Eldridge St. Houston, TX 77094

Type of Vessel: ☐ Passenger Ship ☐ Oil Tanker ☐ Chemical Tanker ☐ Gas Carrier ☒ Mobile Offshore Drilling Unit (MODU)

For Passenger Vessels only:

☐ The maximum number of passengers is _____. The maximum allowable total persons on board is _____ total persons.

For Tank ships only:

☐ The vessel is authorized to carry into or from United States ports:

- ☐ the products listed on the Certificate of Fitness for the Carriage of Dangerous Chemicals in Bulk
- ☐ the products listed on the Certificate of Fitness for the Carriage of Liquefied Gases in Bulk subject to conditions noted on the attached USCG Subchapter O Endorsement (SOE)
- ☐ crude oil or other petroleum products
- ☐ Category C/Category D Noxious Liquid Substances as noted on the vessel's NLS Certificate of the Attachment to the IOPP Certificate

☐ This vessel meets the U.S. double-hull design standards of 33 CFR 157.10d.

☐ On _____, this vessel must meet the U.S. double-hull design standard of 33 CFR 157.10.d.

☐ This vessel's vapor collection system (VCS) has been certified as meeting the requirements of Title 46, Code of Federal Regulations, part 39 and Title 33, Code of Federal Regulations, Section 155.750(d) by _____, under the authority of Title 46, Code of Federal Regulations,Section 39.10-13(d), for the collection of cargo vapors listed in the certification dated _____, and is therefore accepted for the collection of these vapors in the navigable waters of the United States.

☐ This vessel is equipped with (check all that apply): ☐ segregated ballast tanks ☐ dedicated clean ballast tanks ☐ crude oil washing system.

☐ This vessel complies with the requirements of 33 CFR 157.10 (c) to operate as a (check all that apply): ☐ Crude Oil Carrier ☐ Product Carrier

☐ This vessel is equipped with an inert gas system that complies with the requirements of SOLAS 74 (amended) II-2/62 and 46 CFR 32.

For MODU's only:

☒ This vessel has been examined in accordance with (check one): ☒ 33 CFR 143.207(a) ☐ 33 CFR 143.207(b) ☐ 33 CFR 143.207(c)

☒ This maximum allowable number of persons on board is 75 and the minimum number of lifeboatmen required is 6.

☒ This vessel is: ☐ Self-propelled ☒ Non Self-propelled

THIS IS TO CERTIFY:

That the ship has been examined and found to be in compliance with all applicable U.S. and international marine safety and environmental protection standards.

		Tank Ships and MODU's	Passenger Ships
Officer in Charge, Marine Inspection	04MAR2002 Date Issued	Annual Exam Due	Quarterly Exams Due
MORMS Zone	04MAR2004 Date of Expiration	04MAR2003	1. _____ 2. _____ 3. _____

agency may not conduct or sponsor, and a person is not required to respond to a collection of information unless it displays a valid OMB control number.

The Coast Guard estimates that the average burden for this report is 10 minutes (or 0.17 hours). You may submit any comments concerning the accuracy of this burden estimate or any suggestions for reducing the burden to: Commandant (G-MOC), U.S. Coast Guard, 2100 2nd St., SW, Washington D.C. 20593-0001 or Office of Management and Budget, Paperwork Reduction Project (2115-0504), Washington, DC 20503.

Notice to Mariners

All vessels: All vessels requiring an examination for issuance of a Certificate of Compliance shall notify the Officer in Charge, Marine Inspection for the port where the vessel is to be expected at least seven days before the vessel arrives to arrange the particulars of the inspection.

For passenger ships only: For this Certificate of Compliance to remain in effect, the vessel shall be maintained to the safety and construction standards as examined for compliance with applicable marine safety and environmental protection laws and international conventions. The vessel must also possess a valid Passenger Ship Safety Certificate. This Certificate of Compliance shall be aboard the ship when embarking passengers in a United States port.

For tank ships only: For this Certificate of Compliance to remain in effect, the vessel shall be maintained to the safety and construction standards as examined for compliance with applicable marine safety and environmental protection laws and international conventions. If the vessel is authorized to carry liquefied gases in bulk, a valid Subchapter O Endorsement must be attached to this Certificate. The vessel must also possess a valid Cargo Ship Safety Certificate, or Cargo Ship Safety Construction and Safety Equipment Certificates issued under the provisions of the International Convention for the Safety of Life at Sea, 1974, as amended and, if applicable, an IMO Certificate of Fitness. This certificate shall be aboard the vessel when loading, discharging, or carrying any authorized cargoes into a United States port.

For MODUs only: This Certificate of Compliance is valid only while operating on the Outer Continental Shelf (OCS) of the United States. The vessel shall be maintained to the safety, construction, and operating standards as examined for compliance with applicable marine safety and environmental protection laws and international conventions, including 33 CFR 151, 155, and 156. If the vessel enters a United States port or territorial waters, additional requirements may apply. This certificate shall be aboard the vessel while operating on the OCS.

In accordance with the provisions of 46 CFR 4 and 33CFR 160.215, the vessel owner, operator, agent, master, or person in charge is required to immediately notify the nearest United States Coast Guard Marine Safety Office whenever a marine casualty or hazardous condition occurs.

INSTRUCTIONS FOR USCG BOARDING OFFICERS

1. Entries shall be made on this certificate in accordance with current instructions for the following types of foreign vessel examinations:

   Renewal and annual examinations on oil tankers, gas carriers, and MODU's.
   Annual and quarterly passenger vessel examinations
   Examinations incidental to repairs or alterations
   Other compliance boardings (i.e. - MARPOL, Ballast Water, etc.)
   Deficiency checks

2. Upon completion of an examination for issuance or re-issuance of this certificate, a new copy of this certificate with the front side filled by the inspector will be given to the master for safekeeping.

3. The remarks section should include a reference to any deficiencies noted during the examination. In particular a complete description of any deficiencies left outstanding at the end of the examination shall be entered. If a deficiency list is too extensive to fit in the remarks section, a CG-5437B shall be issued to detail the discrepancies, and "See CG-5437B dated ___" shall be entered in the remarks section. The master should be instructed to make this certificate and the referenced document available to the next boarding team.

4. In the final column, the port and place of examination, Coast Guard unit, the date of the examination and the signature of the boarding officer shall be entered. If more than one inspector participates in the examination, the lead inspector shall sign the record. The date of the examination shall be the final day of the examination.

EXAMINATION RECORD

(see instructions above)

Type of Examination	Remarks	Place, Date and Port State Control Officer
Renewal	CONDUCTED COC(a) EXAM AND ISSUED CERTIFICATE. CONDUCTED DRILLS FIRE & ABANDON. SAT.	Place of examination GOM ST198 Unit MORMS Date 4 MAR 02 Port State Control Officer's Signature [signature]
		Place of examination Unit Date Port State Control Officer's Signature
		Place of examination Unit Date Port State Control Officer's Signature
		Place of examination Unit Date Port State Control Officer's Signature

OMB NO. 2115-0545

CONDITIONS

1. Upon invalidation of this Certificate, it shall be returned to the Chief, Vessel Certification (NPFC-cv), National Pollution Funds Center, 4200 Wilson Blvd., Suite 1000, Arlington VA 22203-1804. Except as permitted by 33 CFR 138, no alterations to this Certificate are permitted after issuance by the U. S. Coast Guard. If the vessel's name is changed, the operator changes its name (but remains the same company), or the expiration date falls due, a new Certificate will be necessary. However, the underlying insurance guaranty or other evidence of financial responsibility will not be canceled by such invalidation of this Certificate.

2. If the Certificant named on the face of this Certificate ceases to be the responsible operator of the vessel, the Certificant shall complete the notice below and return this Certificate to the above address.

Notice is hereby given that on _____ (Date), for the reason set forth below, the operator named on this Certificate ceased to be responsible for the vessel named on this Certificate. The Certificant is no longer the responsible operator due to (check one):

[ ] sale of the vessel,
[ ] termination of the demise charter,
[ ] other (please specify): _____

The location of the vessel on the date of cessation was _____

_____

The new party responsible for the vessel is: _____

BY: _____
Signature Date

_____
Typed Name of Signer

_____
Title

_____
Company

Note: This information is required to assure coverage of the correct vessel owner and operator as required under 33 CFR 138. Failure to comply with 33 CFR 138 concerning the carriage of a valid Certificate may result in one or more of the following sanctions: (1) detainment; (2) denial of entry into U.S. waters or port; (3) OPA civil penalty, not to exceed $27,500 per day; (4) CERCLA Class I administrative penalty, not to exceed $25,000 per violation; (5) CERCLA Class II administrative penalty of $25,000 per day of violation (or $75,000 per day if a second or subsequent violation); (6) refusal of clearance to leave U.S. waters; (7) seizure and forfeiture of vessel.

AMERICAN BUREAU OF SHIPPING

CHARTERED
1862

NUMBER
8131104

CERTIFICATE OF CLASSIFICATION

ENSCO 55

of Monrovia, Liberia

Description Steel Barge Drilling Platform

Dimensions, Length 54.864M *Breadth* 53.340M *Depth* 7.620M

Tonnage, Gross 5,083 (ITC-69) *Net* 1,524 (ITC-69)

Owner DUAL 91, INC.

Shipbuilder NORTHROP GRUMMAN/LITTON-AVONDALE

Engine Builder

Year of Build 1981 *Hull Number* 6203

This is to Certify that the above has been surveyed in accordance with the Rules of this Bureau and entered in the Record with the Class

*A1 Self Elevating Drilling Unit

19 April 2002
Issue Date

31 December 2006
Expiration Date

Chief Surveyor/Director of Classification

Assistant Secretary

NOTE: *This certificate evidences compliance with one or more of the Rules, Guides, standards or other criteria of American Bureau of Shipping and is issued solely for the use of the Bureau, its committees, its clients or other authorized entities. The classification certificate is a representation only that the vessel, structure, item of material, equipment or machinery or any other item covered by this certificate has met one or more of the Rules of American Bureau of Shipping. The certificate is governed by the terms and conditions on the reverse side hereof, and governed by the Rules and standards of American Bureau of Shipping who shall remain the sole judge thereof.*

AMERICAN BANK NOTE COMPANY

The Republic of Liberia

Bureau of Maritime Affairs

Permanent Certificate of Registry

Certificate Number 154-99

OFFICIAL NUMBER: 8911 CALL LETTERS: ELLD8 SERVICE: MOBILE OFFSHORE DRILLING UNIT

VESSEL NAME: ENSCO 55 HOME PORT: Monrovia

THIS IS TO CERTIFY THAT pursuant to the provisions of Chapter 2 of Title 22 of the Liberian Code of Laws 1956 (The Liberian Maritime Law), as amended, PAUL LYNN DAIGLE having submitted the required declaration of ownership does depose and say that:

NAME	RESIDENCE	CITIZENSHIP	PROPORTION
ENSCO OFFSHORE COMPANY II (Liberian Foreign Maritime Entity)	Delaware, U.S.A.	U. S. A.	100%

is (are) the sole owner of the herein named and described vessel.

FORMER NAME: DUAL RIG 91 YEAR BUILT: 1981

BUILT BY: INGALLS SHIPBUILDING PLACE BUILT: PASCAGOULA, MISSISSIPPI,

CLASS SOCIETY: American Bureau of Shipping GROSS TONS: 5083 NET TONS: 1524

(DUAL TONNAGE VESSEL) GROSS TONS: N/A NET TONS: N/A

ENGINE MANUFACTURER: N/A

NO. AND TYPE OF ENGINES: N/A PROPELLING POWER (KW): N/A

NUMBER OF MASTS: N/A NUMBER OF DECKS: 1 HULL MATERIAL: STEEL

LENGTH: 52.67 M BREADTH: 53.34 M DEPTH: 7.62 M HEIGHT (if applicable): N/A

and WHEREAS the Maritime Administrator, on behalf of the Government of Liberia approved the application of the aforesaid owner for registration of the vessel and whereas the owner has complied with the requirements for registration and submitted same, the vessel is therefore duly registered under the Laws and Flag of the Republic of Liberia.

Issued by the Authority of the Government of the Republic of Liberia at Reston, Virginia this 19th day of July, 1999.

DEPUTY COMMISSIONER OF MARITIME AFFAIRS OF LIBERIA

John J. Enright Jr.

RLM-201 (Rev. 3/94)

MOBILE OFFSHORE DRILLING UNIT SAFETY CERTIFICATE

ISSUED IN PURSUANCE OF THE
IMO CODE FOR THE CONSTRUCTION AND EQUIPMENT OF
MOBILE OFFSHORE DRILLING UNITS
UNDER THE AUTHORITY OF THE GOVERNMENT OF REPUBLIC OF LIBERIA

by E.L. BECHE
Surveyor, American Bureau of Shipping

Distinctive identification (Name or number)	Type (Section 1.3 of the Code)	Port of Registry
ENSCO 55 8911/ELLD8/IMO# 8752506	SELF ELEVATING DRILLING UNIT	MONROVIA

Date on which keel was laid or unit was at a similar state of construction or on which major conversion was commenced.

30 SEPTEMBER 1980

THIS IS TO CERTIFY:

1. That the above-mentioned unit has been duly surveyed in accordance with the applicable provisions of the Code for the Construction and Equipment of Mobile Offshore Drilling Units. AS MODIFIED BY GUIDELINES OF ADMINISTRATION FOR ITS APPLICATION TO EXISTING UNITS.

2. That the survey showed that the structure, equipment, fittings, radio station arrangements and materials of the unit and the conditions thereof are in all respects satisfactory and that the unit complies with the relevant provisions of the Code. AS MODIFIED BY GUIDELINES OF ADMINISTRATION FOR ITS APPLICATION TO EXISTING UNITS.

3. That the life-saving appliances provide for a total number of 100 persons and no more as follows:

   Two (2) rigid totally enclosed motor propelled and fire protected survival craft of aggregate capacity for 100 persons.

   Four (4) survival craft, capable of floating and breaking free in the event of the unit becoming submerged of aggregate capacity for 100 persons.

   No rescue boat(s) each capacity for —— persons.

4. That, in accordance with section 1.4 of the Code, the provisions of the Code are modified in respect of the unit in the following manner:

   N/A

This Certificate is valid until the 31 day of DECEMBER 2006
subject to Intermediate MODU surveys.

Completion date of the survey on which this certificate is based: 02 APRIL 2002

Issued at HOUSTON, TEXAS on 30th AUGUST 2002

ABS

The undersigned declares that he is duly authorized by the said Government to issue this Certificate.

E.L. BECHE American Bureau of Shipping

REPUBLIC OF LIBERIA
MINISTRY OF FINANCE
Bureau of Maritime Affairs

INTERNATIONAL LOAD LINE CERTIFICATE

ISSUED UNDER THE PROVISIONS OF THE

INTERNATIONAL CONVENTION ON LOAD LINES, 1966,
AS MODIFIED BY THE PROTOCOL OF 1988 RELATING THERETO

8131104-7
Certificate No.

UNDER THE AUTHORITY OF THE GOVERNMENT OF

REPUBLIC OF LIBERIA

E.L. Beche
Surveyor, American Bureau of Shipping

Particulars of Ship

Name of Ship	Distinctive Number or Letters	Port of Registry	Length(L) as defined in Article 2(8) (in meters)	IMO Number[1]
ENSCO 55	8911/ELLD8	MONROVIA	52.67 M	8752506

Freeboard assigned as: * A new ship / ~~An existing ship~~

Type of Ship: * ~~Type "A"~~ / ~~Type "B"~~ / ~~Type "B" with reduced freeboard~~ / Type "B" with increased freeboard

* Delete whatever is inapplicable

Freeboard from Deck Line To Center Of Ring 3054 mm

			Load Line	
Tropical	N/A	mm (T)	N/A	mm above (S)
Summer	N/A	mm (S)	- Upper edge of line through center of ring	
Winter	N/A	mm (W)	N/A	mm below (S)
Winter North Atlantic	N/A	mm (WNA)	N/A	mm below (S)
Timber tropical	N/A	mm (LT)	N/A	mm above (LS)
Timber summer	N/A	mm (LS)	N/A	mm above (S)
Timber winter	N/A	mm (LW)	N/A	mm below (LS)
Timber winter North Atlantic	N/A	mm (LWNA)	N/A	mm below (LS)
Allowance for fresh water for all freeboards other than timber	N/A	mm		
For timber freeboards	N/A	mm		

The upper edge of the deck line from which these freeboards are measured is: OPPOSITE TOP OF STEEL UPPER deck at side

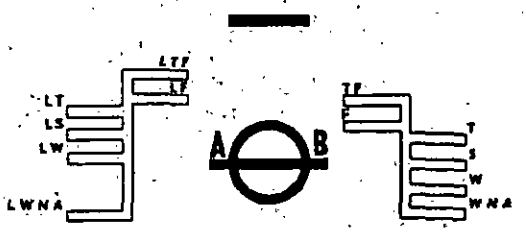

[1] In accordance with the IMO Ship Identification Number Scheme, adopted by resolution A.600(15).

THIS IS TO CERTIFY:

1. That the ship has been surveyed in accordance with the requirements of article 14 of the Convention.

2. That the survey showed that the freeboards have been assigned and load lines shown above have been marked in accordance with the Convention.

This certificate is valid until 31 DECEMBER 2006[2] subject to the annual surveys in accordance with article 14(1)(c) of the Convention.

Completion date of survey on which this certificate is based: 02 APRIL 2002

Issued at HOUSTON, TEXAS
Place of issue of certificate

01 AUGUST 2002
Date of issue

E.L. BECHE
Surveyor, American Bureau of Shipping

NOTES:

1. When a ship departs from a port situated on a river or inland waters, deeper loading shall be permitted corresponding to the weight of fuel and all other materials required for consumption between the point of departure and the sea.

2. When a ship is in fresh water of unit density the appropriate load line may be submerged by the amount of fresh water allowance shown above. Where the density is other than unity, an allowance shall be made proportional to the difference between 1.025 and the actual density.

ABS

[2] Insert the date of expiry as specified by the Administration in accordance with article 19(1) of the Convention. The day and the month of this date correspond to the anniversary date as defined in article 2(9) of the Convention, unless amended in accordance with article 19(8) of the Convention.

REPUBLIC OF LIBERIA
MINISTRY OF FINANCE
Bureau of Maritime Affairs

INTERNATIONAL OIL POLLUTION PREVENTION CERTIFICATE

THIS CERTIFICATE SHALL BE SUPPLEMENTED BY A RECORD OF CONSTRUCTION AND EQUIPMENT

ISSUED UNDER THE PROVISIONS OF THE

INTERNATIONAL CONVENTION FOR THE PREVENTION OF POLLUTION FROM SHIPS, 1973,
AS MODIFIED BY THE PROTOCOL OF 1978 RELATING THERETO AND AS AMENDED BY RESOLUTION MEPC.39(29)
(HEREINAFTER REFERRED TO AS "THE CONVENTION")

UNDER THE AUTHORITY OF THE GOVERNMENT OF

REPUBLIC OF LIBERIA

by E.L. BECHE
(Surveyor, American Bureau of Shipping)

Particulars of Ship

Name of Ship	Distinctive Number or Letters	Port of Registry	Gross Tonnage[1] a) According to footnote [2] b) ~~According to footnote~~ [3]	Deadweight of ship (metric tons)[4]	IMO Number
ENSCO 55	8911/ELLD8	MONROVIA	5,083	N/A	8752506

Type of ship
~~Oil tanker~~
~~Ship other than an oil tanker with cargo tanks coming under Regulation 2(2) of Annex I of the Convention~~
Ship other than any of the above

THIS IS TO CERTIFY:

1. That the ship has been surveyed in accordance with Regulation 4 of Annex I of the Convention;
2. That the survey shows that the structure, equipment, systems, fittings, arrangement and material of the ship and the condition thereof are in all respects satisfactory and that the ship complies with the applicable requirements of Annex I of the Convention.

This Certificate is valid until 31 DECEMBER 2006 subject to surveys in accordance with Regulation 4 of Annex I of the Convention.[5]

This certificate is valid only when Supplement Form A issued at Houston, Texas on 01 August 2002 is attached.

Completion date of the survey on which this certificate is based: 02 APRIL 2002

Issued at HOUSTON, TEXAS
(Place of Issue of Certificate)

ABS

01 AUGUST 2002
(Date of Issue)

E.L. BECHE Surveyor, American Bureau of Shipping

[1] Delete as appropriate
[2] The above gross tonnage has been determined in accordance with the International Convention on Tonnage Measurement of Ships, 1969.
[3] The above gross tonnage has been determined by the authorities of the Administration in accordance with the national tonnage rules which were in force prior to the coming into force for existing ships of the International Convention on Tonnage Measurement of Ships, 1969.
[4] For oil tankers.
[5] Insert the date of expiry as specified by the Administration in accordance with regulation 8(1) of Annex I of the Convention. The day and the month of this date corresponds to the anniversary date as defined in regulation 1(31) of Annex I of the Convention, unless amended in accordance with regulation 8(8) of Annex I of the Convention.

SUPPLEMENT TO THE INTERNATIONAL OIL POLLUTION PREVENTION CERTIFICATE (IOPP CERTIFICATE)

RECORD OF CONSTRUCTION AND EQUIPMENT FOR SHIPS OTHER THAN TANKERS

In respect of the provisions of Annex I of the International Convention for the Prevention of Pollution from Ships, 1973, as modified by the Protocol of 1978 relating thereto (hereinafter referred to as "the Convention").

Notes:

1. This form is to be used for the third type of ships as categorised in the IOPP Certificate, i.e. "ships other than any of the above." For oil tankers and ships other than oil tankers with cargo tanks coming under regulation 2(2) of Annex I of the Convention, Form B shall be used.
2. This record shall be permanently attached to the IOPP Certificate. The IOPP Certificate shall be available on board the ship at all times.
3. If the language of the original Record is neither English nor French, the text shall include a translation into one of these languages.
4. Entries in boxes shall be made by inserting either a cross (x) for the answer "yes" and "applicable" or a dash (-) for the answer "no" and "not applicable" as appropriate.
5. Regulation mentioned in this Record refer to regulations of Annex I of the Convention and resolutions refer to those adopted by the International Maritime Organisation.

Particulars of ship

1.1 Name of ship: ENSCO 55

1.2 Distinctive number or letters: 8911/ELLD8/IMO#8752506

1.3 Port of registry: MONROVIA

1.4 Gross tonnage: 5,083

1.5 Date of build:

1.5.1 Date of building contract: N/A

1.5.2 Date on which keel was laid or ship was at similar stage of construction: 30 September 1980

1.5.3 Date of delivery: N/A

1.6 *Major conversion (if applicable):*

1.6.1 Date of conversion contract: N/A

1.6.2 Date on which conversion was commenced: N/A

1.6.3 Date of completion of conversion: N/A

1.7 Status of ship:

1.7.1 New ship in accordance with regulation 1(6) [X]

1.7.2 Existing ship in accordance with regulation 1(7) [-]

1.7.3 The ship has been accepted by the Administration as an "existing ship" under regulation 1(7) due to unforeseen delay in delivery [-]

2. Equipment for the control of oil discharge from machinery space bilges and oil fuel tanks (regulations 10 and 16)

2.1 Carriage of ballast water in oil fuel tanks:

2.1.1 The ship may, under normal conditions, carry ballast water in oil fuel tanks [-]

2.2 *Type of oil filtering equipment fitted:*

2.2.1 Oil filtering (15 ppm) equipment (regulation 16(4)) [-]

2.2.2 *Oil filtering (15 ppm) equipment with alarm and automatic stopping device* (regulation 16(5)) [-]

2.3 *The ship is allowed to operate with the existing equipment until 6 July 1998* (regulation 16(6)) and is fitted with:

2.3.1 Oily-water separating (100 ppm) equipment [-]

2.3.2 Oil filtering (15 ppm) equipment without alarm [-]

2.3.3 Oil filtering (15 ppm) equipment with alarm and manual stopping device [-]

2.4 *Approval standards**:

2.4.1 *The separating /filtering equipment:*

.1 has been approved in accordance with resolution A.393(X) [-]

.2 has been approved in accordance with resolution MEPC.60(33) [-]

.3 has been approved in accordance with resolution A.233(VII) [-]

.4 has been approved in accordance with national standards not based upon resolution A.393(X) or A.233(VII) [-]

.5 has not been approved. [-]

2.4.2 The process unit has been approved in accordance with resolution A.444(XI) [-]

2.4.3 The oil content meter:

.1 has been approved in accordance with resolution A.393(X) [-]

.2 has been approved in accordance with resolution MEPC.60(33) [-]

2.5 Maximum throughput of the system is: 0 m³/h

* Refer to Recommendation on international performance and test specifications of oily-water separating equipment and oil content meters adopted by the Organization on 14 November 1977 by resolution A.393(X), which superseded resolution A.233(VII); see IMO sales publication IMO-608E. Further reference is made to the Guidelines and specifications for pollution prevention equipment for machinery space bilges adopted by the Marine Environment Protection Committee of the Organization by resolution MEPC.60(33), which, effective on 6 July 1993, superseded resolutions A.393(X) and A.444(XI); see also IMO sales publication IMO-646E.

2.6 Waiver of regulation 16:

2.6.1 The requirements of regulation 16(1) or (2) are waived in respect of the ship in accordance with regulation 16(3)(a). The ship is engaged *exclusively on voyages within special area(s)*: [-]

2.6.2 The ship is fitted with holding tank(s) for the total retention on board of all all oily bilge waters follows: [-]

Tank Identification	Tank Location			Volume (m^3)
	Frames (from) - (to)	Lateral	Position	
			Total volume	m^3

3. Means for retention and disposal of oil residues (sludge)(regulation 17) and bilge water holding tank(s)*

3.1 The ship is provided with oil residue (sludge) tanks as follows:

Tank Identification	Tank Location			Volume (m^3)
	Frames (from) - (to)	Lateral	Position	
Dirty Oil Tank	16-17-1/2	Port Side	Machinery Space Innerbottom	66.4
			Total volume	66.4 m^3

3.2 Means for disposal of residues in addition to the provisions of sludge tanks:

3.2.1 Incinerator for oil residues, capacity: _____ l/h [-]

3.2.2 Auxiliary boiler suitable for burning oil residues [-]

3.2.3 Tank for mixing oil residues with fuel oil, capacity: _____ m^3 [-]

3.2.4 Other acceptable means: SENT ASHORE VIA PORTABLE TANK(S) [X]

* Bilge water holding tank(s) are not required by the Convention, entries in the table under paragraph 3.3. are voluntary.

3.3 The ship is fitted with holding tank(s) for the retention on board of oily bilge water as follows:

Tank Identification	Tank Location		Volume (m^3)
	Frames (from) - (to)	Lateral Position	
		Total volume	m^3

4. Standard discharge connection (regulation 19)

4.1 The ship is provided with a pipeline for the discharge of residues from machinery bilges to reception facilities, fitted with a standard connection in accordance with regulation 19 [X]

5. Shipboard oil pollution emergency plan (regulation 26)

5.1 The ship is provided with shipboard oil pollution emergency plan in compliance with regulation 26 [X]

6. Exemption

6.1 Exemptions have been granted by the administration from the requirements of chapter II of Annex I of the Convention in accordance with regulation 2(4)(a) on those items listed under paragraph(s): _____ of this Record [-]

7. Equivalents (regulation 3)

7.1 Equivalents have been approved by the Administration for certain requirements of Annex I listed under paragraph(s) _____ of this Record [-]

THIS IS TO CERTIFY that this Record is correct in all respects.

Issued at HOUSTON, TEXAS the 01 day of AUGUST 2002

ABS

E.L. Beche Surveyor, American Bureau of Shipping

DIVERTER PROCEDURE

WHILE DRILLING

IN THE EVENT OF FLOW RATE INCREASE OR PIT GAIN:

1. PICK-UP OFF BOTTOM.

2. CLOSE DIVERTER (BOTH DIVERTER VALVES WILL OPEN AUTOMATICALLY).

3. STOP PUMPS AND CHECK FLOW RATE. IF WELL IS FLOWING, CLOSE UP-WIND DIVERTER VALVE IF NECESSARY.

4. START BOTH PUMPS AND BRING THEM UP TO PREVIOUS PUMPING RATE. AFTER 15 SECONDS, INCREASE BOTH PUMPS TO MAXIMUM RATE PUMPING THE HEAVIEST DRILLING FLUID AVAILABLE. WHEN HEAVY FLUID IS DEPLETED OR CIRCULATED TO SURFACE, OBSERVE WELL. IF FLOWING, CONTINUE PUMPING AT MAXIMUM RATE UNTIL FLOW IS DEPLETED. IF MUD IS DEPLETED, PUMP SEA WATER.

5. NOTIFY TOOLPUSHER AND COMPANY REPRESENTATIVE.

CREW MEMBER DUTIES

TOOLPUSHER/CO. REP.	SUPERVISE OVERALL OPERATION.
BARGE ENGINEER.	MAN BARGE CONTROL ROOM. NOTIFY CREW BOAT FOR POSSIBLE EVACUATION.
DRILLER	IN CHARGE OF DRILL FLOOR (MAN DRAWWORKS AND CONTROL MUD PUMPS).
DERRICKMAN	MIX MUD AS REQUIRED.
CRANE OPERATOR and ROUSTABOUTS.	ASSIST DERRICKMAN.
ALL FLOORHANDS.	ASSIST DRILLER.

ENSCO Offshore Co.
September 1994

Shaffer
A Varco Company

MASTER BOP CONTROL PANEL WITH DIVERTER INCORPORATED IN KOOMEY UNIT

Diverter Function

Diverter/BOP valve:

With Diverter/BOP valve in the "BOP" mode the remote panel will operate as a normal BOP control panel.

With the Diverter/BOP valve in the "Diverter" mode the following operation will take place when the "Diverter Valve" is closed.

1 The diverter will close
2 Both port and starboard valves will open

Note: This diverter system is triggered by the hydraulic closing pressure on the Annular function. When the Diverter/BOP valve is in the "Diverter" mode, closing the Annular from any panel or the control unit the sequence that opens both overboard valves will begin.

8404 West Hwy. 90 • New Iberia, Louisiana 70560 • (318) 837-3890 • FAX (318) 837-3893

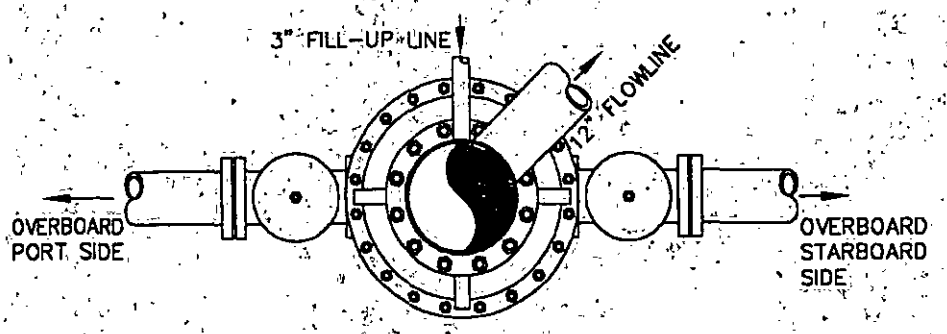

PLAN VIEW

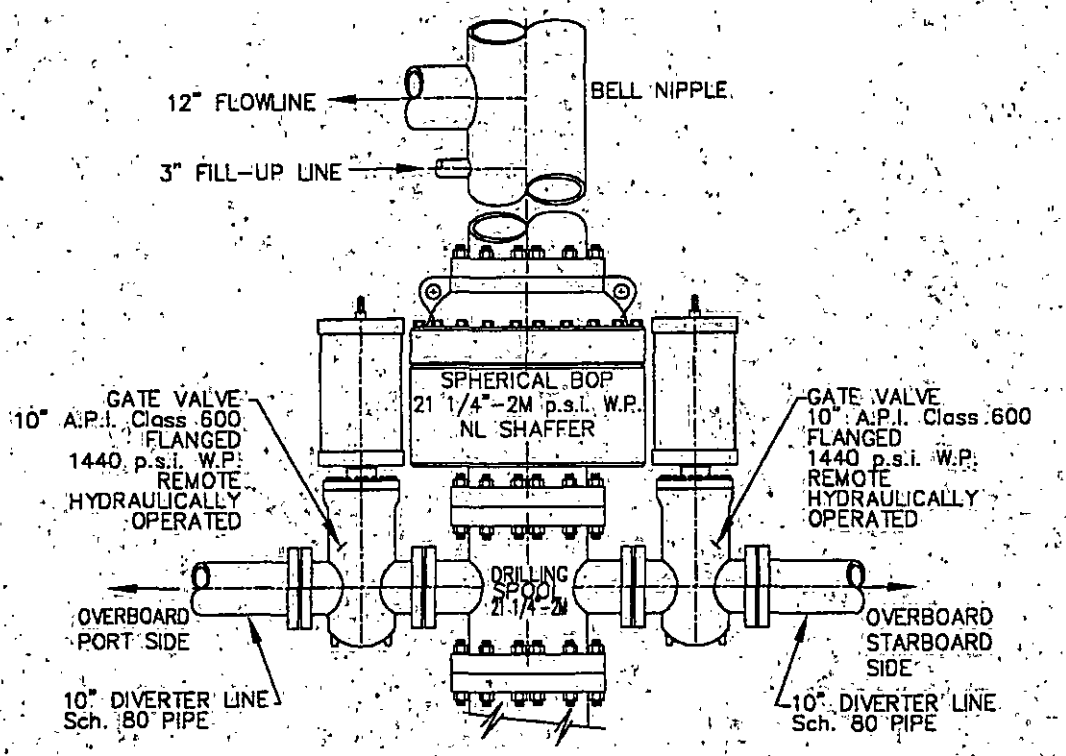

CERTIFIED FOR H_2S SERVICE

STERN ELEVATION

ENSCO

ENSCO 55

DIVERTER SYSTEM

NO.	DATE	REVISION	BY	CHK.	APPR.
1	03/20/97	As Built	JDM		

DRAWN: Joseph D. Mayer	CHECKED BY:
SCALE: 1/4" = 1'-0" UNLESS NOTED	DATE: 02 January 1997
CAD FILE NAME: 55core06	DESIGNED BY:
DRAWING NO.: E55core06	SHEET 1 OF 1 REVISION: 1

PROJ. NO.

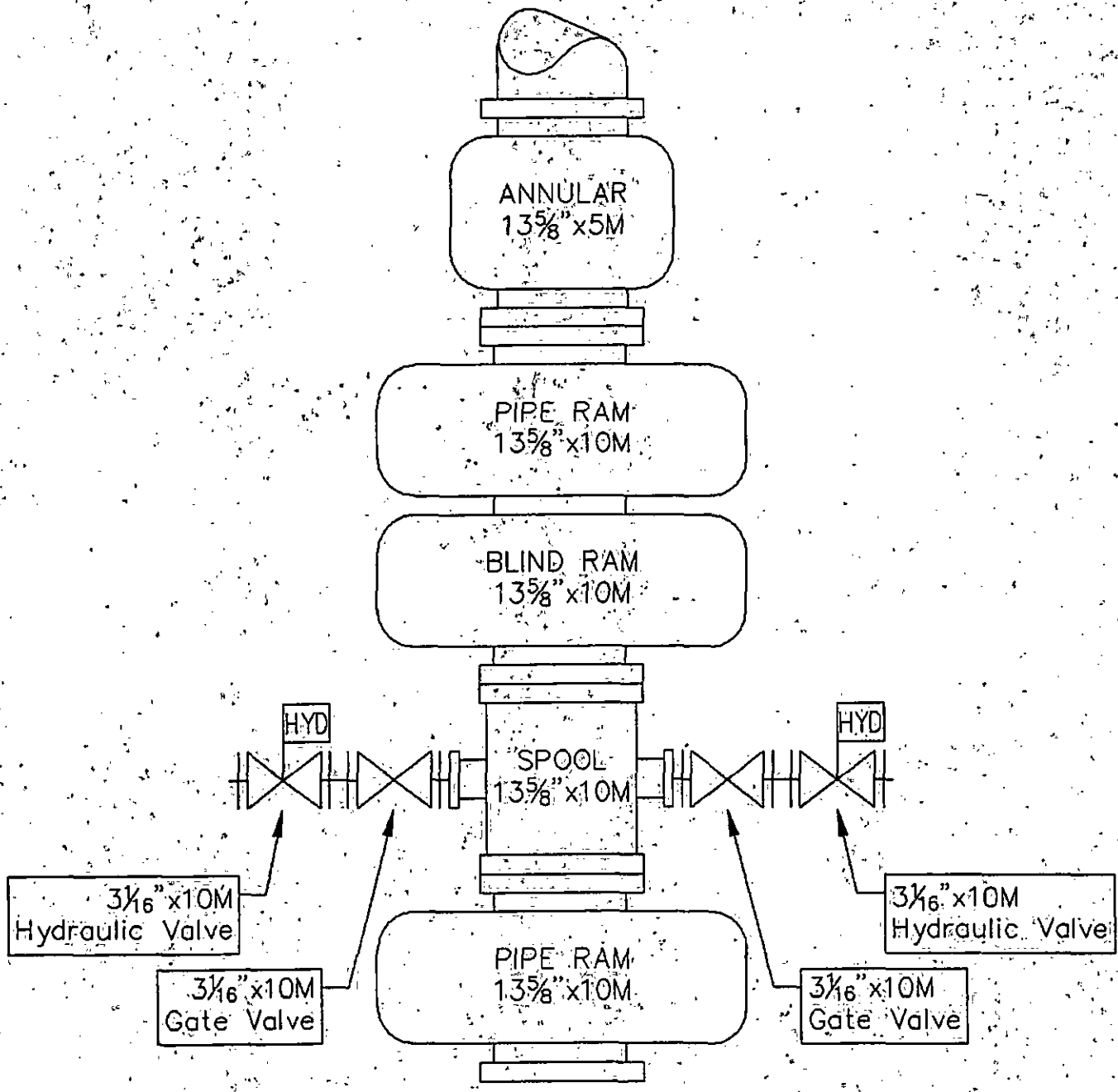

ENSCO OFFSHORE COMPANY

ENSCO Offshore Co., Inc.
620 Moulin Rd.
Broussard, LA. 70518
(337) 837-8500
1-800-322-8217

ENSCO 55

BOP Stack
13⅝" x 10M

DRAWN BY:	Joseph D. Mayer
REVISION NUMBER:	00
REVISION DATE:	01 November 2000
FILE NAME:	E55-03.04
DRAWING NUMBER:	E55-03.04
RIG INFORMATION PACKET PAGE:	Section 03 Page 04 (03.04)

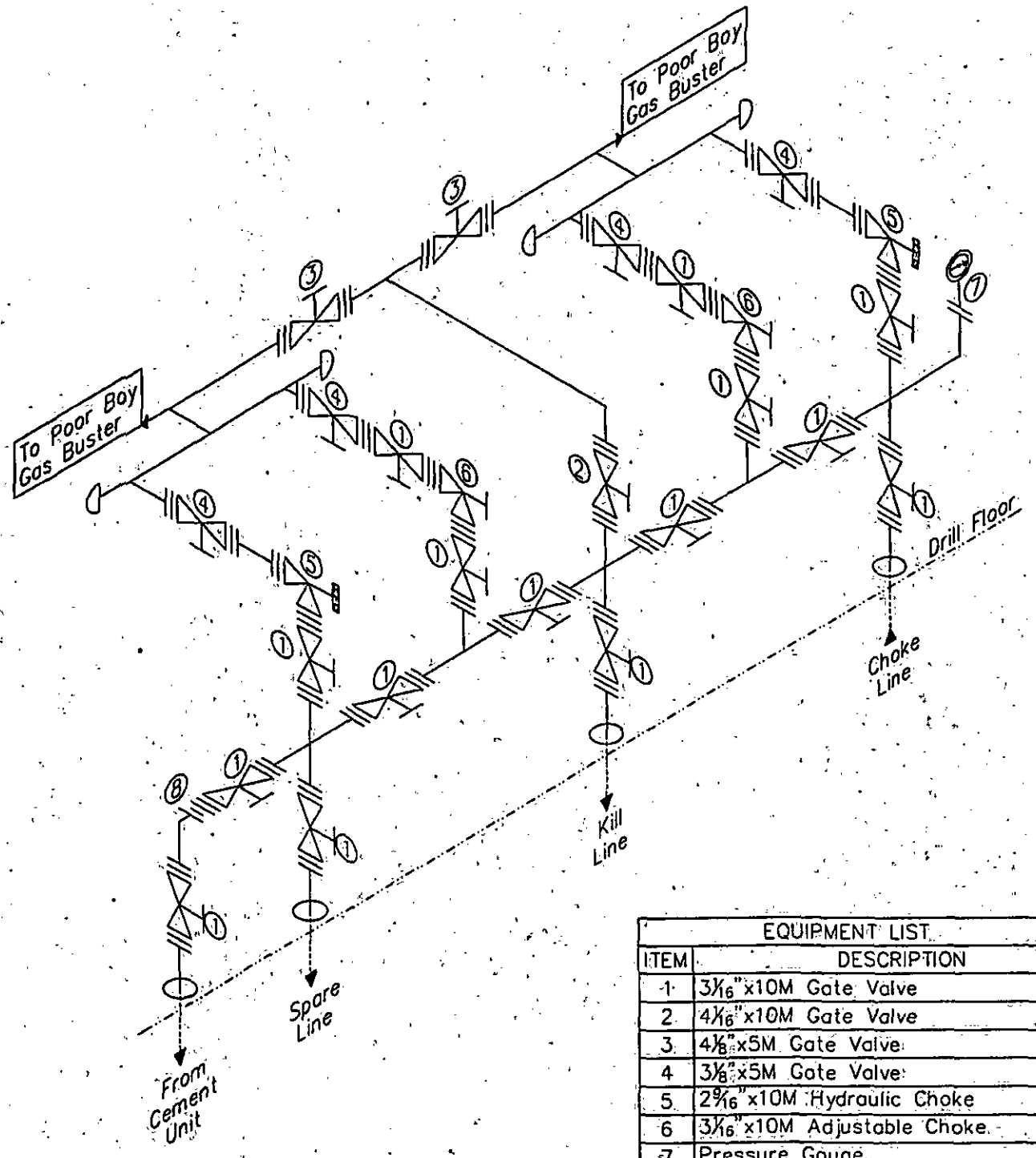

EQUIPMENT LIST	
ITEM	DESCRIPTION
1	3 1/16"x10M Gate Valve
2	4 1/16"x10M Gate Valve
3	4 1/8"x5M Gate Valve
4	3 1/8"x5M Gate Valve
5	2 9/16"x10M Hydraulic Choke
6	3 1/16"x10M Adjustable Choke
7	Pressure Gauge
8	Hammer Union

ENSCO OFFSHORE COMPANY

ENSCO Offshore Co., Inc.
620 Moulin Rd.
Broussard, LA. 70518
(337) 837-8500
1-800-322-8217

ENSCO 55

Choke and Kill Manifold Schematic

DRAWN BY:	Joseph D. Moyer
REVISION NUMBER:	00
REVISION DATE:	18 November 2000
FILE NAME:	E55-03.05
DRAWING NUMBER:	E55-03.05
RIG INFORMATION PACKET PAGE:	Section 03 Page 05 (03.05)

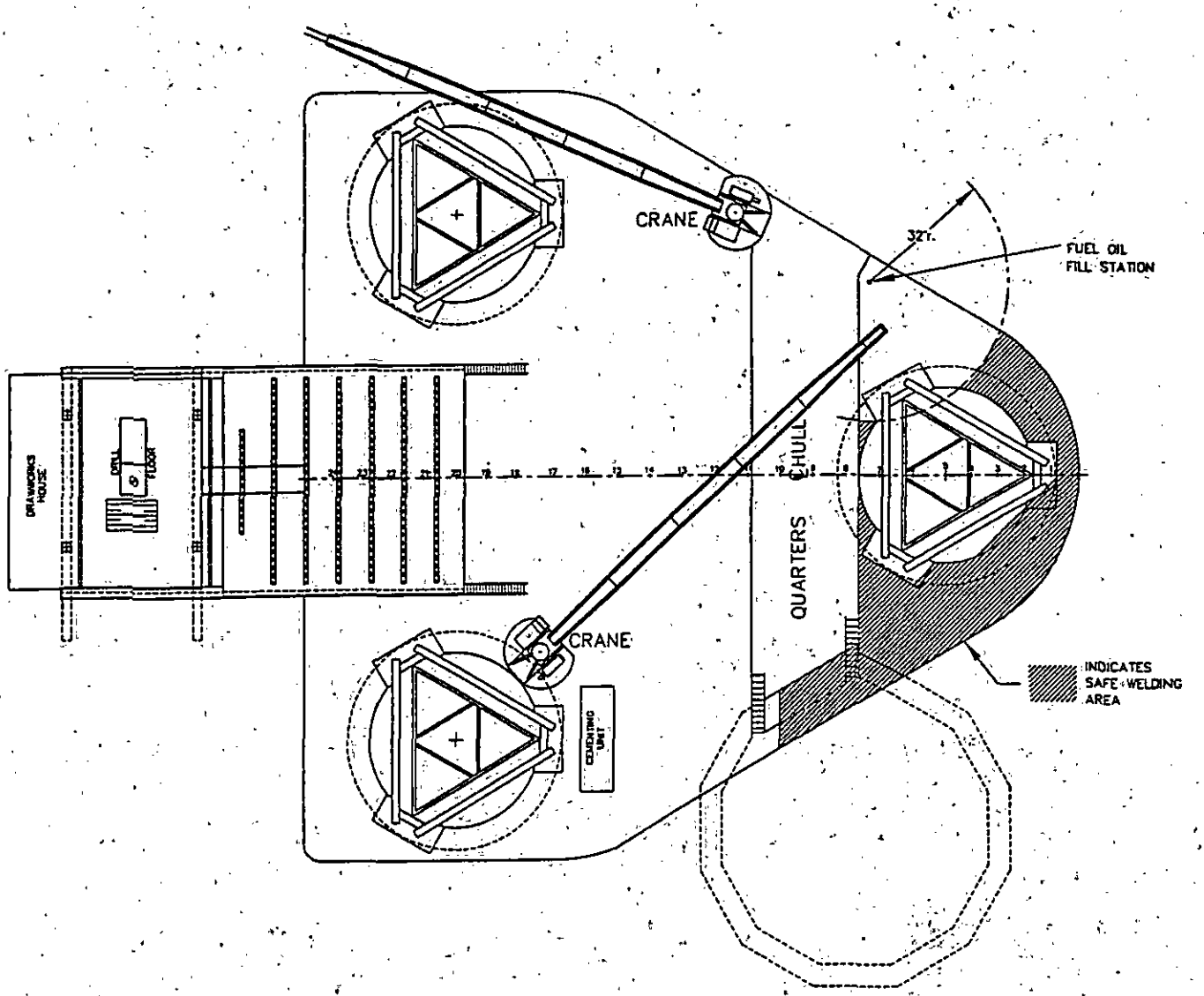

APPROVED BY: _____
Teddy J. Harrington
District Supervisor
Lake Charles District

Date: 11/14/00

ENSCO OFFSHORE COMPANY

ENSCO Offshore Co., Inc.
620 Moulin Rd.
Broussard, LA 70518
(337) 837-8500
1-800-322-8217

ENSCO 55

Designated
Safe Welding Area

DRAWN BY:	Joseph D. Mayer
REVISION NUMBER:	00
REVISION DATE:	07 November 2000
FILE NAME:	E55-01.05
DRAWING NUMBER:	E55-01.05
RIG INFORMATION PACKET PAGE:	Section 01, Page 05 (01.05)