STEP 5

- ROV TO CONNECT AFT CRANE RECOVERY RIGGING TO FLEXIBLE JUMPER PULLING HEAD RIGGING.
- TRANSFER LOAD OF FLEXIBLE FROM 250Te A&R WINCH WIRE TO AFT CRANE WIRE.

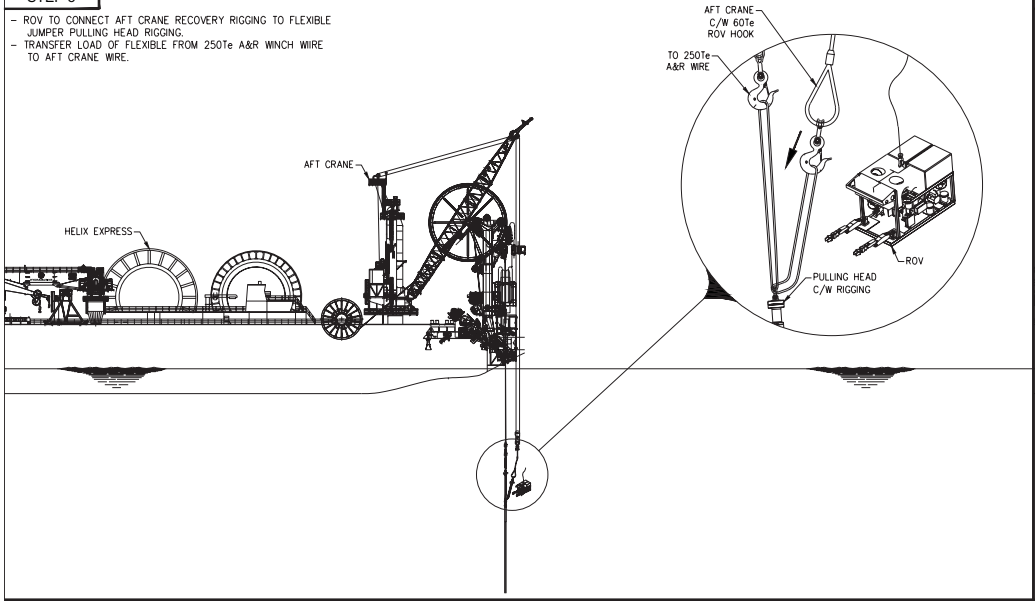

STEP 6

- BRING FLEXIBLE PULLING HEAD ALONGSIDE THE AFT WORK STATION WITH THE AFT CRANE.
- ATTACH THE 20k DECK TUGGER WIRE TO THE PULLING HEAD SHACKLE.
- CREW ON WEST SIRIUS TO CONNECT 60Te WINCH WIRE TO KICK-OFF SPOOL PADEYE.

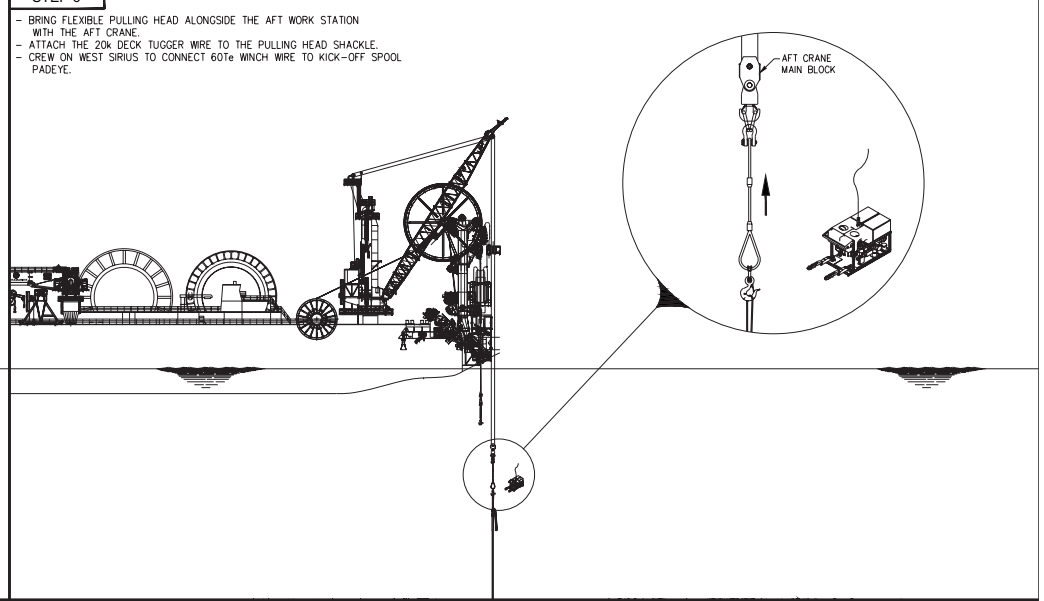

STEP 7

- RAISE FLEXIBLE WITH THE AFT CRANE AND 20k DECK TUGGER UNTIL THE URADUCT PROTECTION IS ACCESSIBLE FROM WORK PLATFORM.
- REMOVE URADUCT PROTECTION FROM FLEXIBLE AND STOW HALF-SHELLS IN HALF-HEIGHT CONTAINER ON DECK.
- INSERT FLEXIBLE INTO TRI-CAT TENSIONER WITH AFT CRANE.

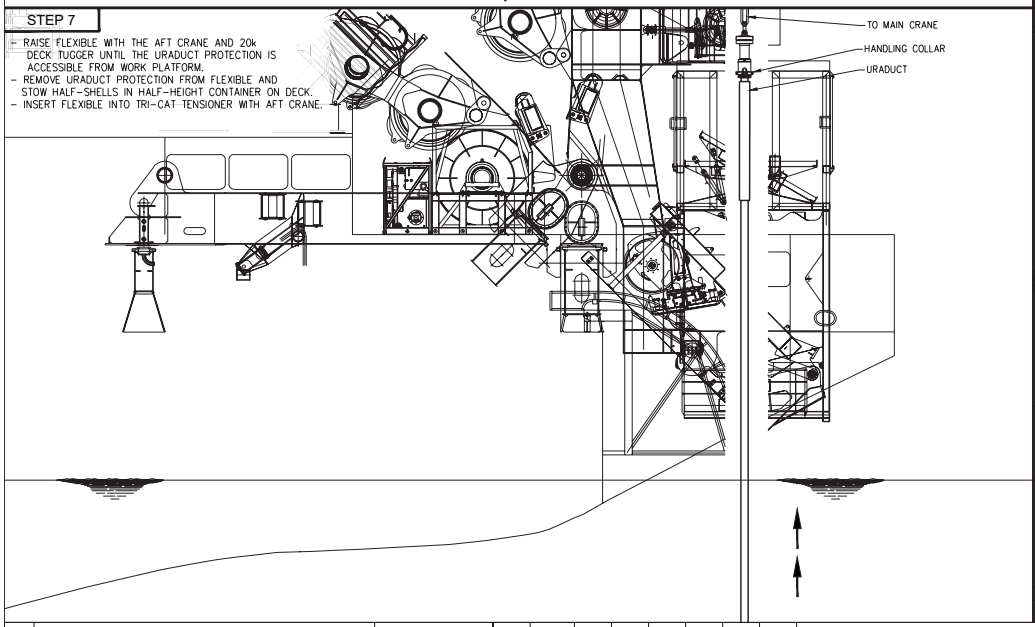

STEP 8

- USING AFT CRANE AND 20k TUGGER WIRE, SUPPORT THE PULLING HEAD AND TRANSFER THE PULLING HEAD DOWN TO THE AFT DECK.
- CONTINUE TO PAY IN ON FLEXIBLE JUMPER TO SPOOL FLEXIBLE ONTO REEL UNITL 1st DBM ARRIVES AT WORK STATION.
- CONNECT A&R WIRE FROM STORAGE REEL TO FLEXIBLE JUMPER PULLING HEAD
- START TO PAY IN ON FLEXIBLE TO SPOOL FLEXIBLE ONTO STORAGE REEL PER THE PACKING ARRANGEMENT DRAWING.

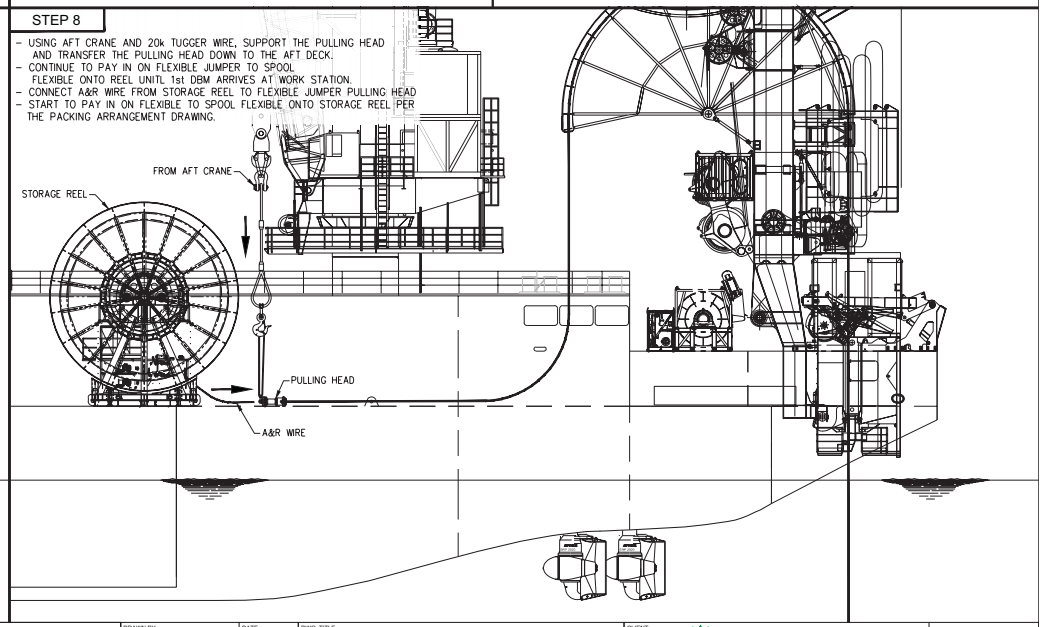

NO.	REFERENCE DRAWING TITLE	REF. DWG. NO.	REV	DATE	BY	DC	ENG	CE	PM	CLIENT	DESCRIPTION
			0		SSJ						APRROVED FOR CONSTRUCTION

DRAWN BY: S.Johnson	DATE: 02 AUG 10	DWG. TITLE: **CONTAINMENT AND DISPOSAL PROJECT UPPER 6" FLEXIBLE DECOMMISSIONING (FSR I)**	CLIENT: bp
ENGINEER	DATE		
PROJECT ENGINEERING MANAGER	DATE		CAD No.: SHEET 3 OF 5 / JOB No.: -
SCALE AT 'D'-SIZE: NTS			DWG No.: MDP-38-HI-DG-0029-03 / REV.: 0

STEP 9

- PERSONNEL ON THE WEST SIRIUS DRILL RIG TO PAY OUT ON 60te WINCH TO LOWER FLEXIBLE 2nd END BENEATH STERN OF HELIX EXPRESS.

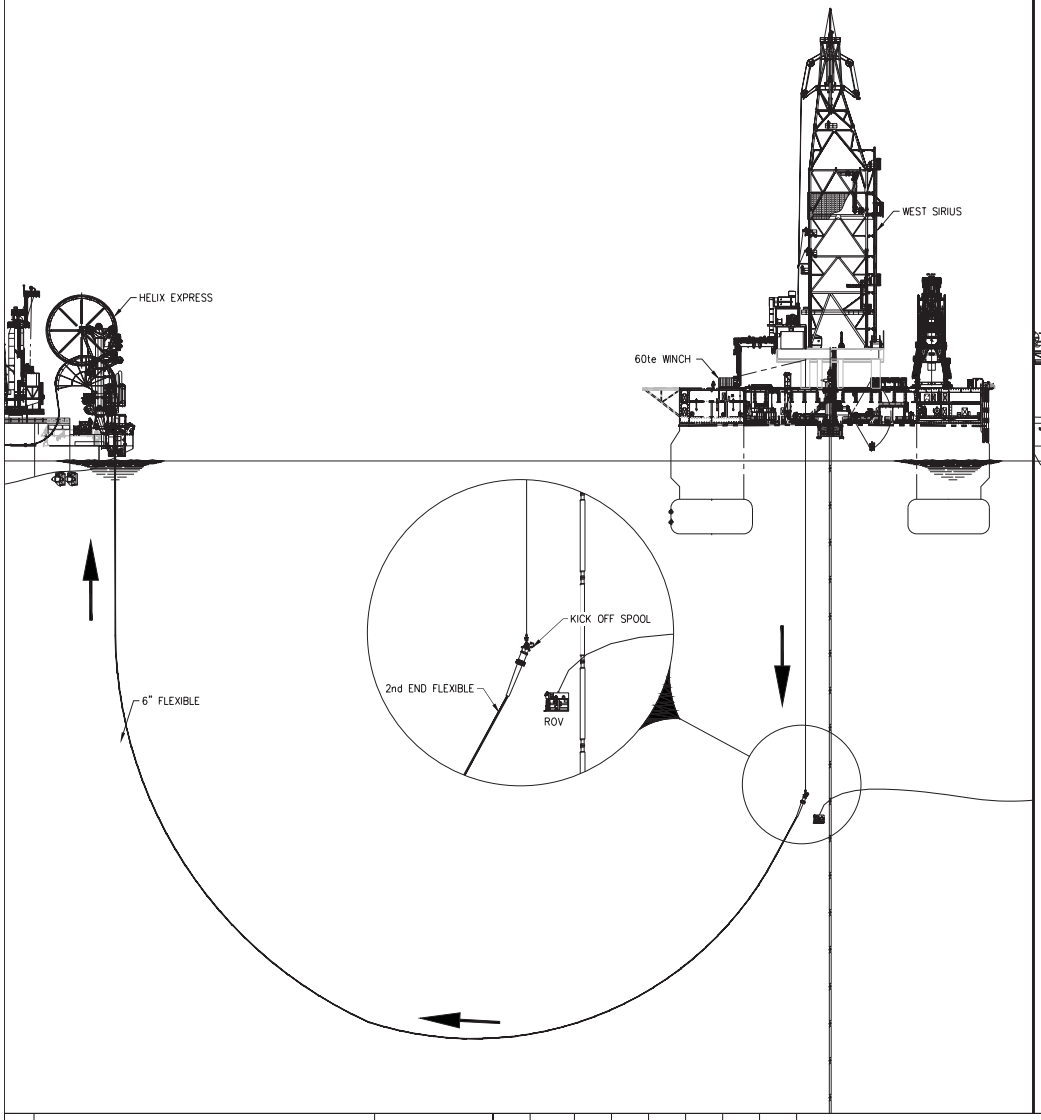

STEP 10

- STEP VESSEL BACK IN TOWARDS WEST SIRIUS.
- ROV TO RELEASE 60te A&R WINCH FROM FLEXIBLE 2nd END BY CUTTING SACRIFICIAL SLING ON KICK-OFF SPOOL LIFT RIGGING.

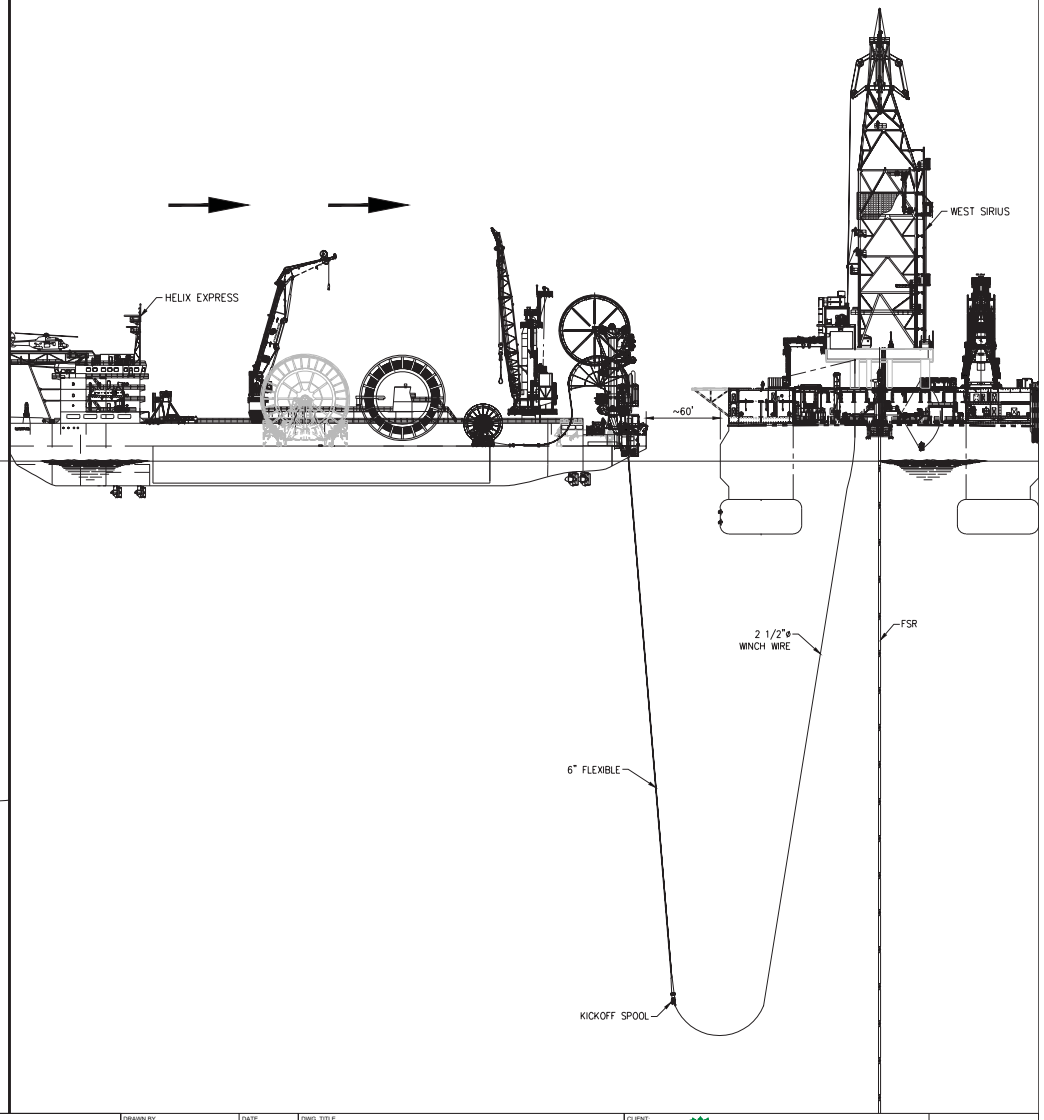

NO.	REFERENCE DRAWING TITLE	REF. DWG. NO.	REV	DATE	BY	DC	ENG	CE	PM	CLIENT	DESCRIPTION
			0		SSJ						APRROVED FOR CONSTRUCTION

DRAWN BY: S.Johnson	DATE: 02 AUG 10
ENGINEER	DATE
PROJECT ENGINEERING MANAGER	DATE
SCALE AT 'D'-SIZE: NTS	

DWG. TITLE

CONTAINMENT AND DISPOSAL PROJECT
UPPER 6" FLEXIBLE DECOMMISSIONING
(FSR I)

CLIENT: bp

CAD No. SHEET 4 OF 5	JOB No. -
DWG No. MDP-38-HI-DG-0129-04	REV. 0

sjohnson Aug 12, 2010 - 5:21pm --- File Path: R:\Projects\ES017477_CDP\Decommissioning\MDP-38-HI-DG-0029-05.dwg

STEP 11

- CONTINUE TO PAY-IN AND REMOVE URADUCT SECTIONS FROM FLEXIBLE AS THEY ARRIVE AT THE AFT WORK STATION.

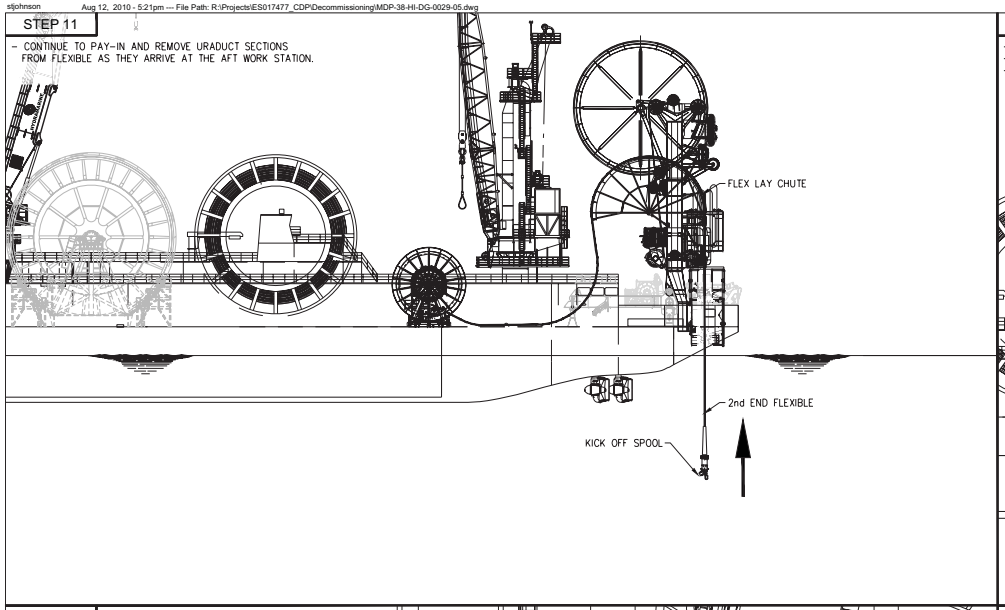

STEP 12

- PAY-IN FLEXIBLE UNTIL KICK-OFF SPOOL HEAD ARRIVES AT WORK STATION.
- RIG AFT CRANE AND 20te DECK WINCH TO KICK-OFF SPOOL LIFT RIGGING.
- OPEN TRI-CAT TENSIONER AND LIFT FLEXIBLE OUT OF TENSIONER AND OVER FLEX LAY CHUTE.

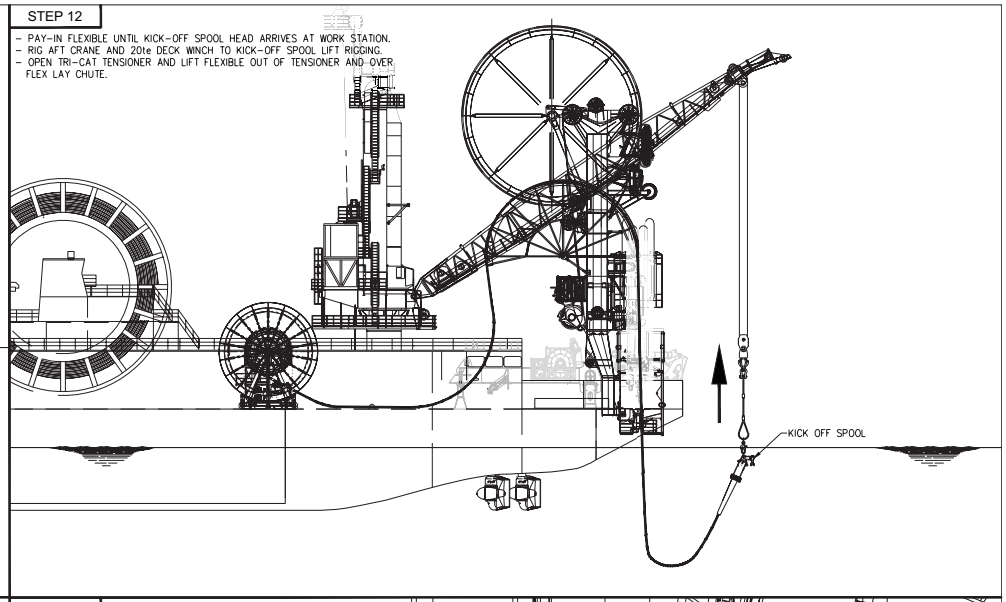

STEP 13

- LOWER 2nd END KICK OFF SPOOL DOWN TO DECK LEVEL AND SUPPORT END OF FLEXIBLE ON TEMPORARY SUPPORT BLOCKS.
- REMOVE KICK OFF SPOOL HEAD & BEND STIFFENER ADAPTOR FROM END OF FLEXIBLE.

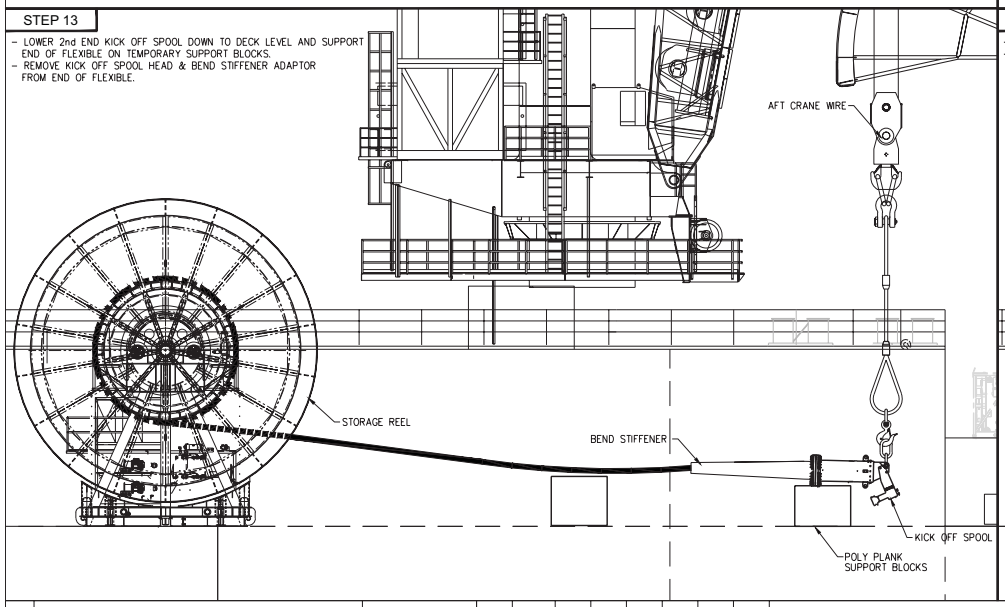

STEP 14

- ATTACH 2nd END PULLING HEAD ONTO FLEXIBLE END FLANGE.
- SPOOL REMAINDER OF FLEXIBLE ONTO REEL AND SECURE END FOR TRANSPORTATION AND STORAGE.

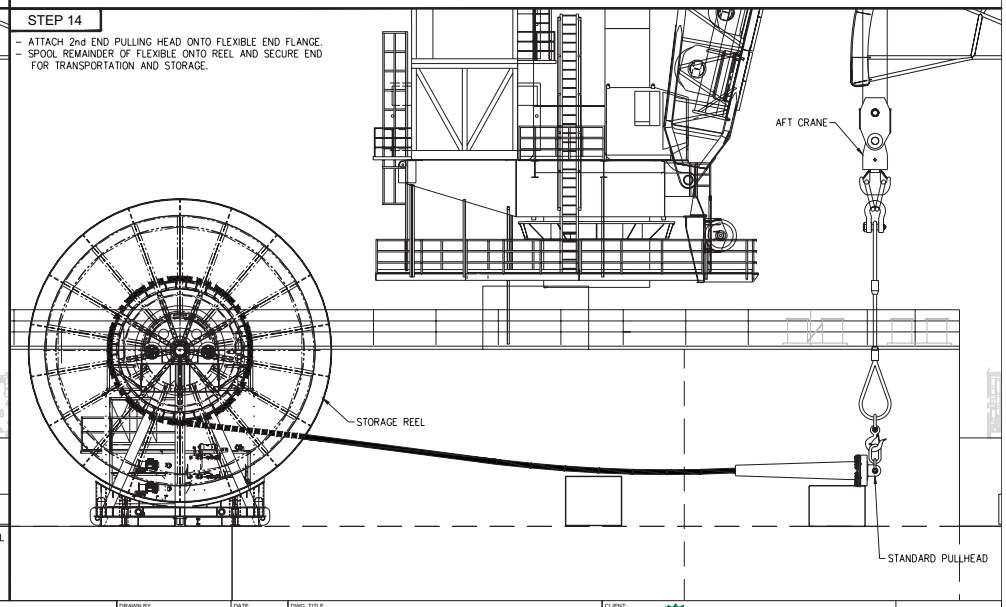

NO.	REFERENCE DRAWING TITLE	REF. DWG. NO.	REV	DATE	BY	DC	ENG	CE	PM	CLIENT	DESCRIPTION
			0		SSJ						APRROVED FOR CONSTRUCTION

DRAWN BY: S.Johnson	DATE: 02 AUG 10	DWG. TITLE: **CONTAINMENT AND DISPOSAL PROJECT II UPPER 6" FLEXIBLE DECOMMISSIONING (FSR I)**	CLIENT: bp
ENGINEER	DATE		
PROJECT ENGINEERING MANAGER	DATE	CAD No.: SHEET 5 OF 5	JOB No.: -
SCALE AT 'D'-SIZE: NTS		DWG No.: MDP-38-HI-DG-0029-05	REV.: 0

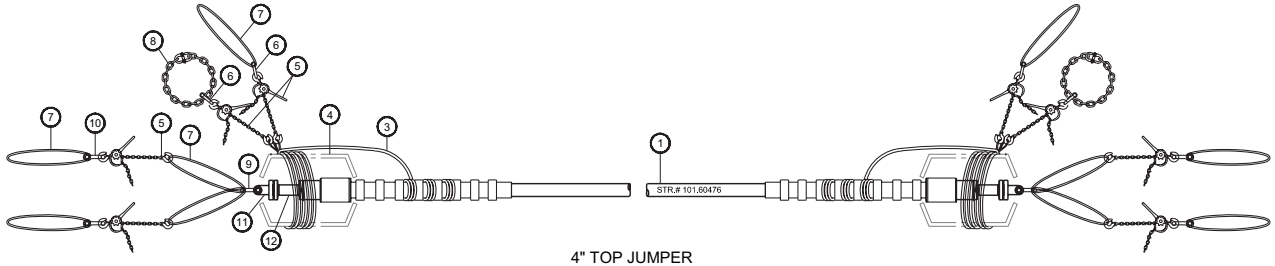

4" TOP JUMPER
RIGGING DETAIL
SCALE: NTS

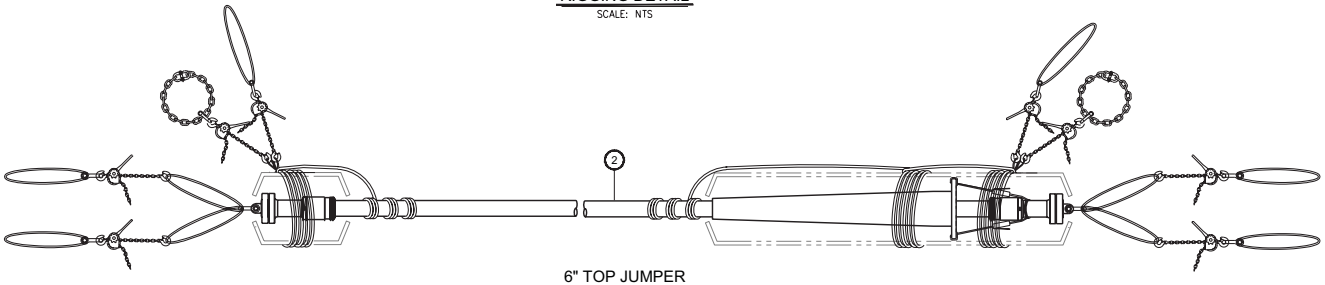

6" TOP JUMPER
RIGGING DETAIL
SCALE: NTS

RIGGING DETAILS - MATERIAL TAKE-OFF TABLE

ITEM	QTY	DESCRIPTION	REFERENCE
1	400Ft	4" FLEXIBLE RISER STRUCTURE	101.60476
2	1060Ft	6" FLEXIBLE RISER STRUCTURE	152.6143
3	8 + 1SP	ENDLESS SOFT SLING SWL 6Te, 18m LONG	–
4	4	END FITTING / STIFFENER PROTECTION	–
5	16+1SP	PULL LIFT, SWL=3Te	–
6	8 + 1SP	SHACKLE 4.75Te SWL	–
7	20+1SP	ENDLESS SOFT SLING, SWL=3Te, Lg.=3m	–
8	4 + 1SP	LASHING CHAIN Ø13 LONG LINKS 5.3Te, 1.5m LONG	–
9	4	SHACKLE, 55Te SWL	–
10	8+1SP	SHACKLE, 8.5Te SWL	–
11	4	45Te PULLHEAD, 7 1/16" 10K API FLG.	OS017455-000-DD-5311-0001
12	2	END FITTING FIXED FLANGE, 7 1/16" 10,000psi API FLG. W/BX-156	EM 152 61433 03
13	1	8.6m REEL	PROVIDED BY TECHNIP
14	1	POLY-PLANK BLOCKS	–
15	1	1.7m SNAIL (INSTALLED ON REEL'S DRUM)	FREE ISSUED BY HELIX (MOUNTED)

TOTAL WEIGHT = 79.7Te (178529lbs)

NOTES:

1. PACKING FOR TRANSPORTATION ONLY, NOT FOR INSTALLATION UNDER TENSION.
2. POLYPLANK FOAM TO BE INSTALLED BETWEEN END FITTINGS AND PIPE.
3. END FITTING RIGGING ARRANGMENTS ARE IDENTICAL FOR BOTH JUMPERS.

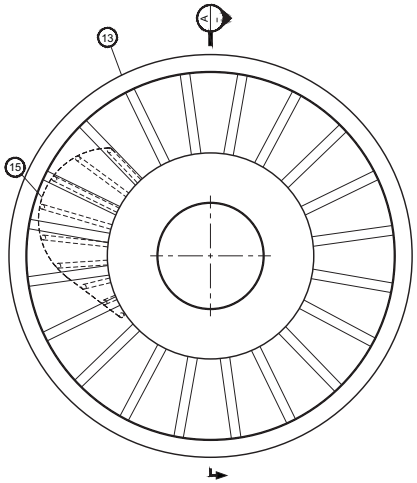

ELEVATION VIEW
SCALE: 1/4" = 1'-0"

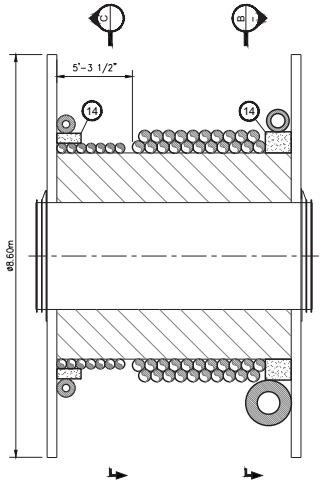

VIEW A
SCALE: 1/4" = 1'-0"

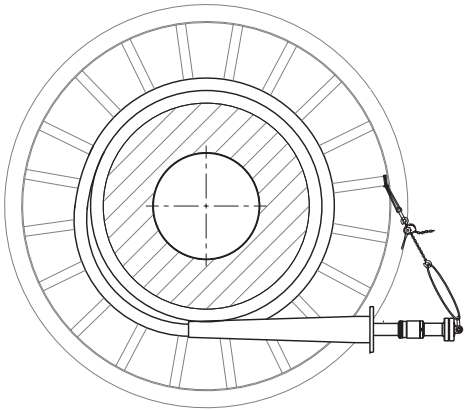

4" JUMPER NOT SHOWN FOR CLARITY.

VIEW B
SCALE: 1/4" = 1'-0"

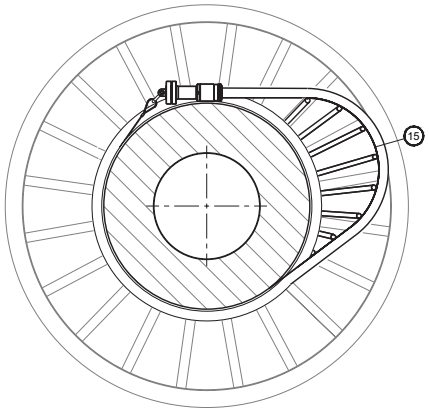

6" JUMPER NOT SHOWN FOR CLARITY.

VIEW C
SCALE: 1/4" = 1'-0"

NO.	REFERENCE DRAWING TITLE	REF. DWG. NO.	REV	DATE	BY	DC	ENG	CE	PM	CLIENT	DESCRIPTION
			0								APPROVED FOR CONSTRUCTION

DRAWN BY: S.Johnson — DATE: 09 AUG 10
ENGINEER — DATE
PROJECT ENGINEERING MANAGER — DATE
SCALE AT 'D'-SIZE

DWG. TITLE:
CONTAINMENT AND DISPOSAL PROJECT
PLAC FOR 4" & 6" TOP JUMPER-FSR2
TOISA PISCES TO FSR2
86 HELIX REEL

CLIENT: bp
CAD No.: -
JOB No.: -
DWG No.: MDP-38-HI-DG-0028
REV.: 0

Attachment 3: Uraduct Protection – Installation Procedure

Uraduct Installation Manual

Trelleborg CRP Ltd

TRELLEBORG

TYPICAL URADUCT INSTALLATION

HALF-SHELL ASSEMBLY PROCEDURE

Introduction

One of the many advantages of Uraduct is that it can be simultaneously installed onto a Cable, Riser, Flowline or Umbilical during a shipboard lay operation. Unlike alternative protection systems it does not require additional support craft, dual lay and protection operation or complex field scheduling.

Apart from the banding tools which are supplied by CRP, no special equipment is required.

A minimum of two staff are normally required to install the Uraduct. One to fit the half shells and place the bands on the Uraduct, and one to operate the banding tools. It is quick and easy to install, and where speed of lay is important up to 350m/hr can be fitted for cable installations with a team of 6 – 8 people using 3 – 4 pneumatic banding tools.

The Uraduct design can be installed as single pairs but CRP recommend that the half-shells are installed with the patented 50% overlap between the upper and lower mouldings. This technique in conjunction with the dowels and mating holes on the axial split line provide a stronger interlocked and connected system for the whole length of coverage.

The following represents a brief outline of Uraduct Installation:

Procedure

STEP 1: - To start installation take two half-shells of Uraduct mouldings. Ensure the female end of the Uraduct is facing **outboard** and overlap the half-shells by 50% as shown in fig 1. The Uraduct is specifically designed to generate the correct overlap when the dowels and mating holes are aligned and the two half-shells lock together. The external banding grooves will automatically line up.

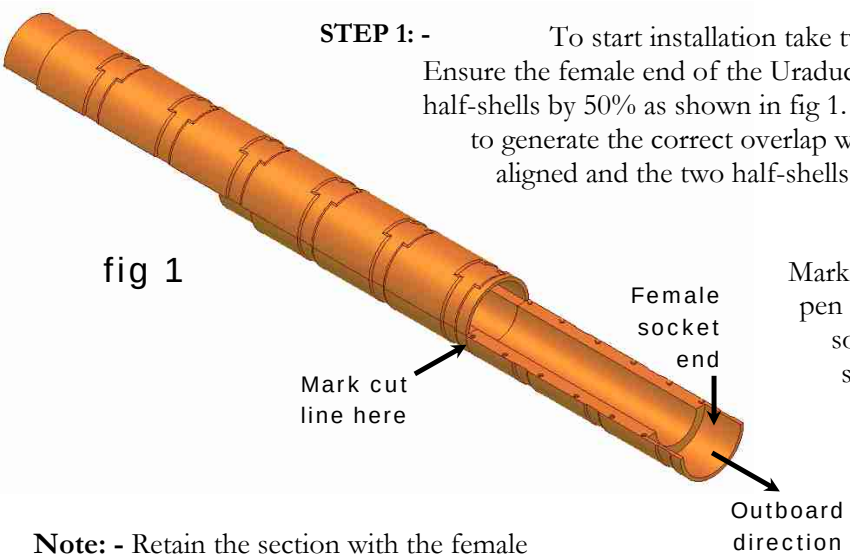

fig 1

Mark the female socket end with a marker pen and cut at the interface of the female socket. The material can be cut with a standard hack saw or power saw – no special tools are required.

Note: - Retain the section with the female socket for use at the end of the Uraduct string. **DO NOT DISCARD ANY PIECES**

TRELLEBORG
ENGINEERED SYSTEMS

STEP 2: -

Take a further piece of Uraduct half shell and remove the male spigot. Save this Uraduct half shell for the end of the Uraduct string.

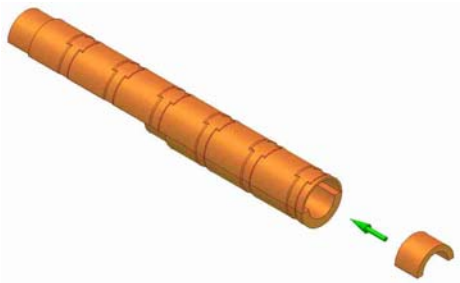

STEP 3:-

If required the male spigot can be glued into place at the female start end. Band the Uraduct together using the banding tools to attach the bands (see banding guide)

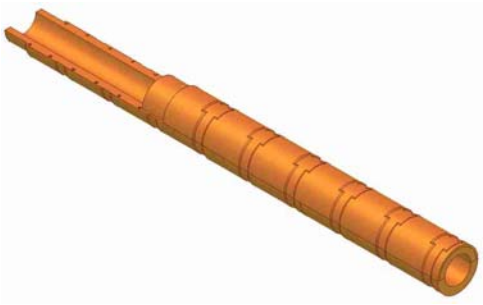

STEP 4:-

Continue to install the full lengths of Uraduct shells so that each length overlaps its opposite half shell by 50%. Band the Uraduct half shells together as each section is added.

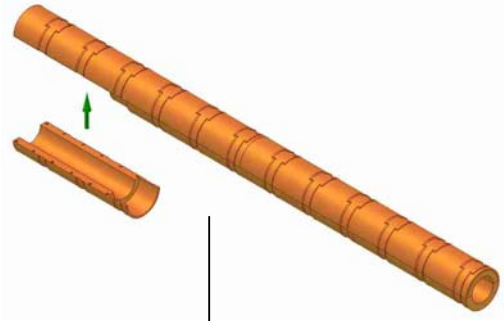

STEP 5:-
When the last full length piece of Uraduct has been fitted, fit the Uraduct half shell with spigot removed (as retained from step 2) and finally fit the piece of half shell (retained from step 1) to complete the Uraduct string.

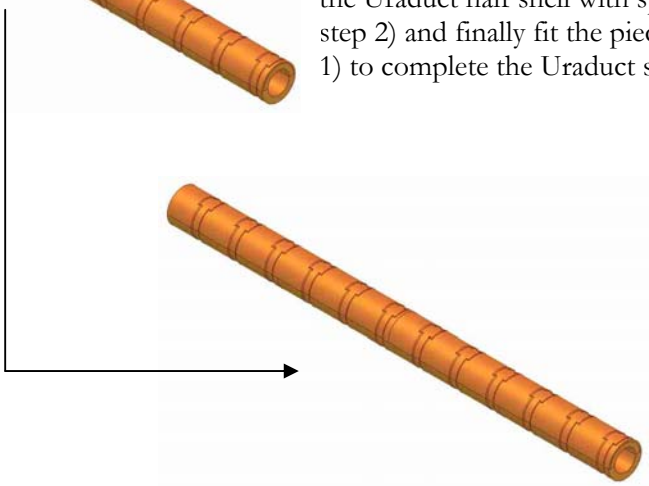

URADUCT®
cable and flowline protection

TRELLEBORG OFFSHORE - PRODUCTION METHOD SHEET

Uraduct Banding

(This PMS is complete at Section No 5)

Choose Applicable Locations TCL
Category SIM

Issue Notes:
<5> Safety Notes added.

APPROVAL	Author	Health and Safety	Authoriser
PMS No 317	Jayne Simm	Ray Cann	Paul Ryding
Issue No 5	06/04/2001	06/04/2001	06/04/2001

1 SAFETY NOTES

<5> 1.1 Hand protection is to be worn whilst handling the banding.

1.2 Eye protection must be worn at all times when handling or using the equipment.

2 INTRODUCTION

This method applies to the preparation, assembly and application of metallic banding to CRP Uraduct using the Signode (or similar) pneumatic tensioning and sealing tool.

The banding is supplied cut to size or in reels.

The Signode tool must be adjusted to apply the correct tension, prior to commencement of banding. This can be done at CRP or on site.

3 EQUIPMENT/MATERIAL REQUIREMENTS

3.1 CRP Uraduct mouldings.

3.2 Signode or similar pneumatic tensioning and sealing tool.

3.3 Banding as per order requirements cut to size or in reels.

3.4 Seals as per order requirements.

3.5 Reel stand (optional).

3.6 Compressed air supply.

3.7 Anti-seize compound, if required.

4 PREPARATION

NOTE: In order to prevent corrosion of internal parts an possible fouling of the air-motor, the compressed air must be CLEAN, DRY AND LUBRICATED.

When installing the compressed air supply, a filter, regulator, lubricator unit should be stationed within 15 feet (4.6m) of the banding tool, and the supply should incorporate a drain cock which should be inspected and drained daily.

Maximum safe operating pressure is 90 psi (6 Bar) minimum air pressure required to operate the sealer is 65 psi (4.5 Bar).

4.1 Place the banding reel into the stand from either side so that the reel sits in the narrow cage and rests on the two bottom rollers.

4.2 Cut the reel retaining bands free and rotate the reel so that the loose end is visible and at the base of the stand. The stand will feed from either side.

4.3 Feed the loose end of banding under the nearest frame side roller and up through the gap between the side roller and the extreme side of the frame. The banding is now ready to dispense.

4.4 Inspect the tensioning tool for damage or defects and check that the correct jaws are fitted for the width of the banding in use.

4.5 Check that the tool air motor valve collar is turned fully anti-clockwise, to off. Ensure that the tool jaws and tensioning wheel are free of obstruction and connect the compressed air supply to the tool.

4.6 Check that the air pressure is sufficient to attain the required banding tension.

4.7 The banding tension will have been preset at CRP and should not require further attention. If however, the setting has been disturbed, the tension may be manually adjusted. The tool may be fitted with one of two designs of tension adjusters. If the tool is fitted with a locknut/stud assembly at the rear of the air-motor, the tension is adjusted by slackening the locknut and turning the stud using a 4mm allen key clockwise to decrease tension, anti-clockwise to increase. If the tool is fitted with a screwdriver slot under the air motor on-off valve, the tension is adjusted by turning the valve fully on to expose the screwdriver slot, then turning the inner screw until the motor slows or speeds up - the tension will decrease or increase with motor speed.

4.8 It is advisable to check the banding tension prior to actual assembly. This is achieved by assembling the band and seal as detailed in Section 5, and operating the tool to tension the band but not seal or cut it. At this point, check the banding tension is correct. The band should be secure, but not so tight as to cause deformation of the Uraduct. Reset the band tension if required.

5 APPLICATION OF BANDING

Refer to CRP Drawings B405517 & B405516 - Uraduct Banding Sequence

5.1 Assemble the Uraduct mouldings around the pipe or cable as illustrated in Drawing B405517 Steps 1 and 2, so that the moulding location dowels fully interlock. The Uraduct opposing sections should be overlapped by half their length for better joint

stability, and end termination mouldings used if supplied to close the overlap distance at either end of the Uraduct string, or manually cut Uraduct to obtain a flush first end.

5.2 Position the reel stand at the first joint with the reel perpendicular to the Uraduct and the loose end nearest to it.

5.3 Slide a seal, smooth side uppermost, over the loose end of the banding as illustrated in Drawing B405517 Step 3.

5.4 Feed the banding over the top and around the Uraduct, keeping the seal in position over the top of the Uraduct and on the side of the operator, as illustrated in Drawing B405517 Step 4.

5.5 Feed the loose end of the banding through the seal <u>underneath</u> the first wrap, so that the banding tail protrudes from the seal by 50-60mm.

5.6 Bend the banding tail back underneath the seal, as illustrated in Drawing B405517 Step 5.

5.7 Hold the seal and pull on the main banding length back towards the reel to take up the slack.

5.8 If required apply anti-seize compound to the underside of the main banding length for 100-150mm from the reel side of the seal, as illustrated in Drawing B405517 Step 6.

Note: Non-metallic based lubricants should be used for this operation if required.

5.9 Ensure the banding is at mid point in the Uraduct groove, or the tool jaws may not engage properly onto the seal.

5.10 Position the tool over the main banding length which returns to the reel and operate the tool in accordance with the manufacturers instructions, to tension, seal and cut the band. This action is indicated in Drawing B405517 Step 7.

5.11 Check the band position and tension.

5.12 Proceed with banding application for the remainder of the Uraduct.

PMS No 317/Iss 5
End of Document

DRAWING No. B405516 | ISSUE 02

THIS DOCUMENT CONTAINS CONFIDENTIAL INFORMATION. ALL RIGHTS (INCLUDING COPYRIGHT, CONFIDENTIAL INFORMATION, TRADE SECRETS AND DESIGN RIGHTS) ARE OWNED BY C.R.P. GROUP LTD. NO USE OR DISCLOSURE IS TO BE MADE WITHOUT PRIOR WRITTEN PERMISSION OF C.R.P. GROUP LTD. COPYRIGHT 2006 C.R.P. GROUP LIMITED. ALL RIGHTS RESERVED

CAUTION– ALWAYS WEAR HAND & EYE PROTECTION

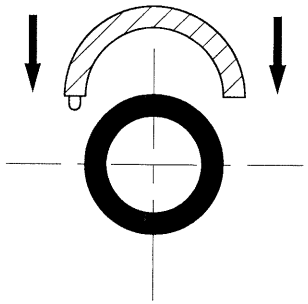

STEP 1

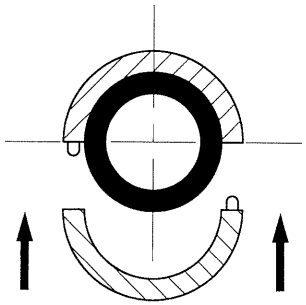

STEP 2

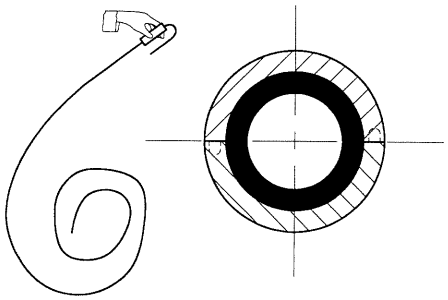

STEP 3

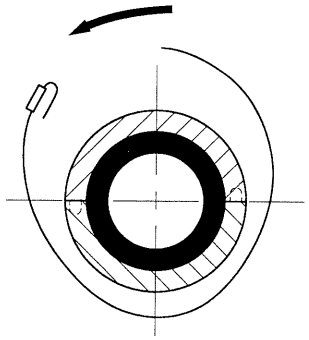

STEP 4

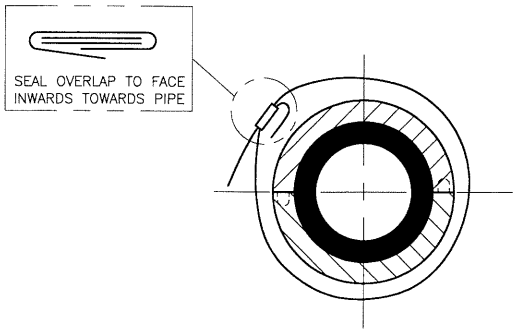

STEP 5

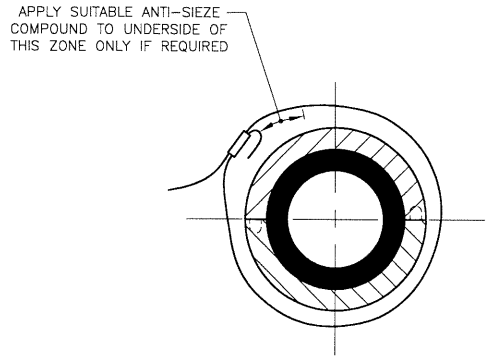

STEP 6

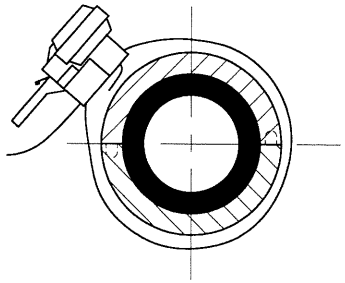

STEP 7

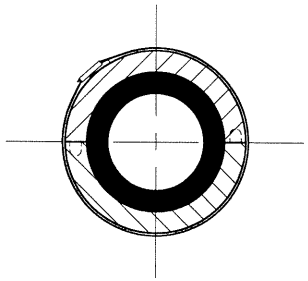

STEP 8

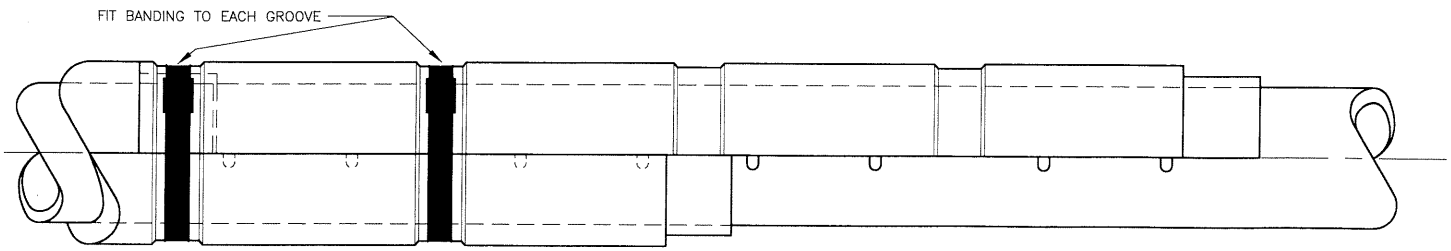

DIRECTION OF BANDING →

STEP 9

NOTE – DRAWING IS NOT TO SCALE

No.	DATE	REVISION	DRAWN	CHK'D	APPR'D
02	27/11/96	STEP 6 MODIFIED			
01	19/07/95	FIRST ISSUE	PJH	TY	RM

CRP GROUP LIMITED
STANLEY WAY, STANLEY, SKELMERSDALE, LANCASHIRE, WN8 8EA, ENGLAND.
U.K. TELEPHONE : 01695 712000
U.K. FACSIMILE : 01695 712111

CLIENT CRP GROUP LTD

PROJECT URADUCT PROTECTION SYSTEM

TITLE URADUCT INSTALLATION SEQUENCE FOR PRECUT BANDING

SCALE	DRAWN BY	SHEET SIZE	PROJECTION
:NTS		A3	

PROJECT No.	DRAWING No.	ISSUE
CR1004	B405516	2

CAD GENERATED DRAWING, DO NOT ALTER MANUALLY (836)

DRAWING No.	ISSUE
B 405517	01

THIS DOCUMENT CONTAINS CONFIDENTIAL INFORMATION. ALL RIGHTS (INCLUDING COPYRIGHT, CONFIDENTIAL INFORMATION, TRADE SECRETS AND DESIGN RIGHTS) ARE OWNED BY C.R.P. GROUP LTD. NO USE OR DISCLOSURE IS TO BE MADE WITHOUT PRIOR WRITTEN PERMISSION OF C.R.P. GROUP LTD. COPYRIGHT 1995 C.R.P. GROUP LIMITED. ALL RIGHTS RESERVED

CAUTION– ALWAYS WEAR HAND & EYE PROTECTION

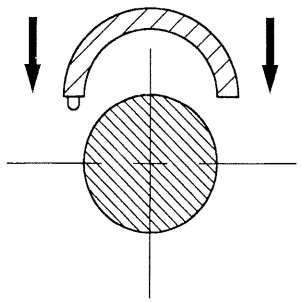

STEP 1

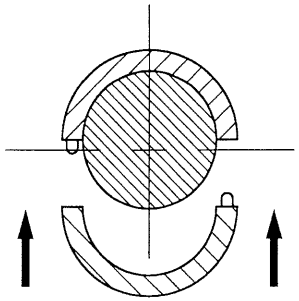

STEP 2

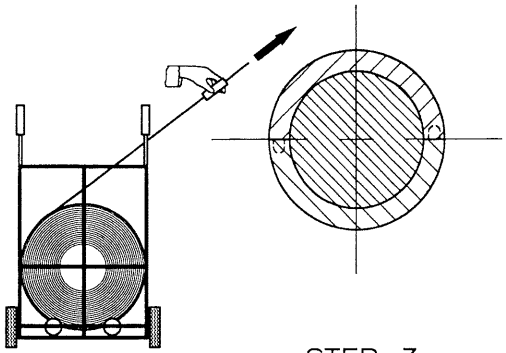

STEP 3

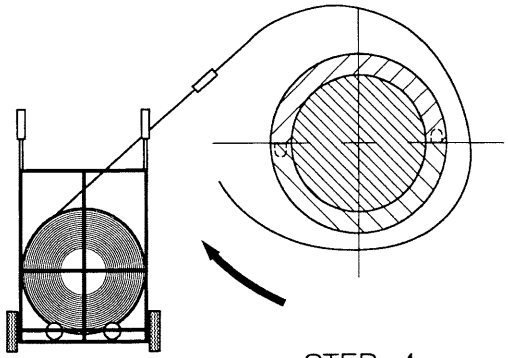

STEP 4

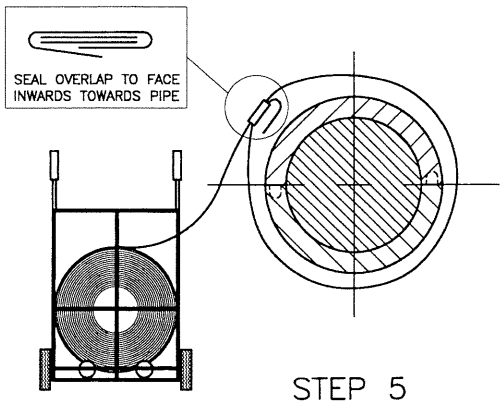

STEP 5

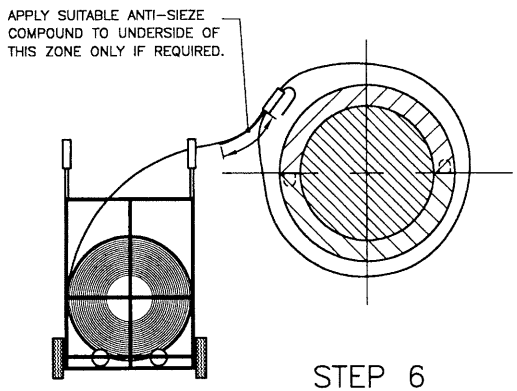

STEP 6

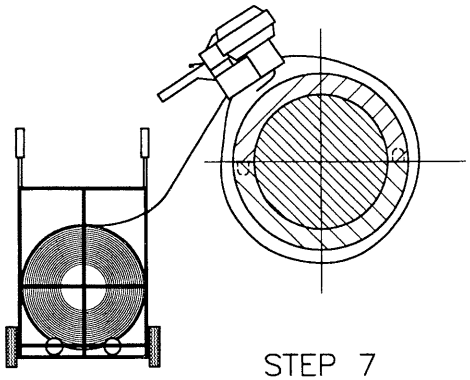

STEP 7

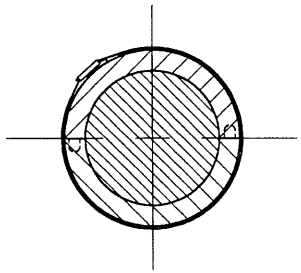

STEP 8

NOTE – DRAWING IS NOT TO SCALE

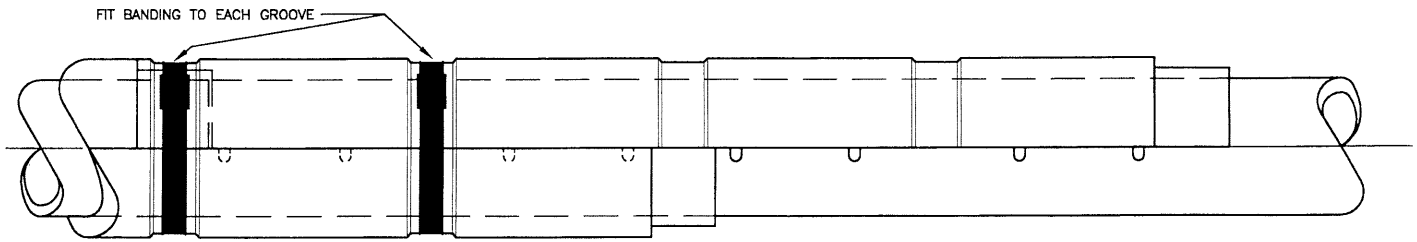

DIRECTION OF BANDING →

STEP 9

No.	DATE	REVISION	DRAWN	CHK'D	APPR'D
01	19/07/95	FIRST ISSUE			

C.R.P. GROUP LTD
STANLEY WAY, STANLEY, SKELMERSDALE, LANCASHIRE, WN8 8EA, ENGLAND.
U.K. TELEPHONE : 01695 724343
U.K. FACSIMILE : 01695 721444

CLIENT CRP GROUP LTD

PROJECT URADUCT PROTECTION SYSTEM

TITLE

URADUCT INSTALLATION SEQUENCE FOR CONTINUOUS BANDING

SCALE	DRAWN BY	SHEET SIZE	PROJECTION
:NTS	PJH	A3	

PROJECT No.	DRAWING No.	ISSUE
CR1004	B 405517	01

FILE LOCATION : F:\DRAWINGS\405DWG\517–13M.DWG

CAD GENERATED DRAWING, DO NOT ALTER MANUALLY (B36)

Attachment 4: Bend Restrictor Installation Procedure

WHITEFIELD PLASTICS CORPORATION

∅8” ID 78” LOR VBR SYSTEM ASSEMBLY PROCEDURE

WHITEFIELD PLASTICS #A1014901

TECHNIP ASSY #

PO:

P0	01 Jun 2010	Released for client review	BGS		
Rev.	Date	Description	By	Endorsed	Approved

Designing and Molding Custom Urethane Products since 1961
Whitefield Plastics

2300 W.W. Thorne Dr.
Houston, TX 77073
USA
www.whitefieldplastics.com

CONTENTS

1. Required Tools: 4
2. Preparation Work 4
3. VBR String Make-up Procedure 4
4. Appendix 8

Read carefully! Failure to follow procedure may damage components.

Figure 1 – Termination Connection

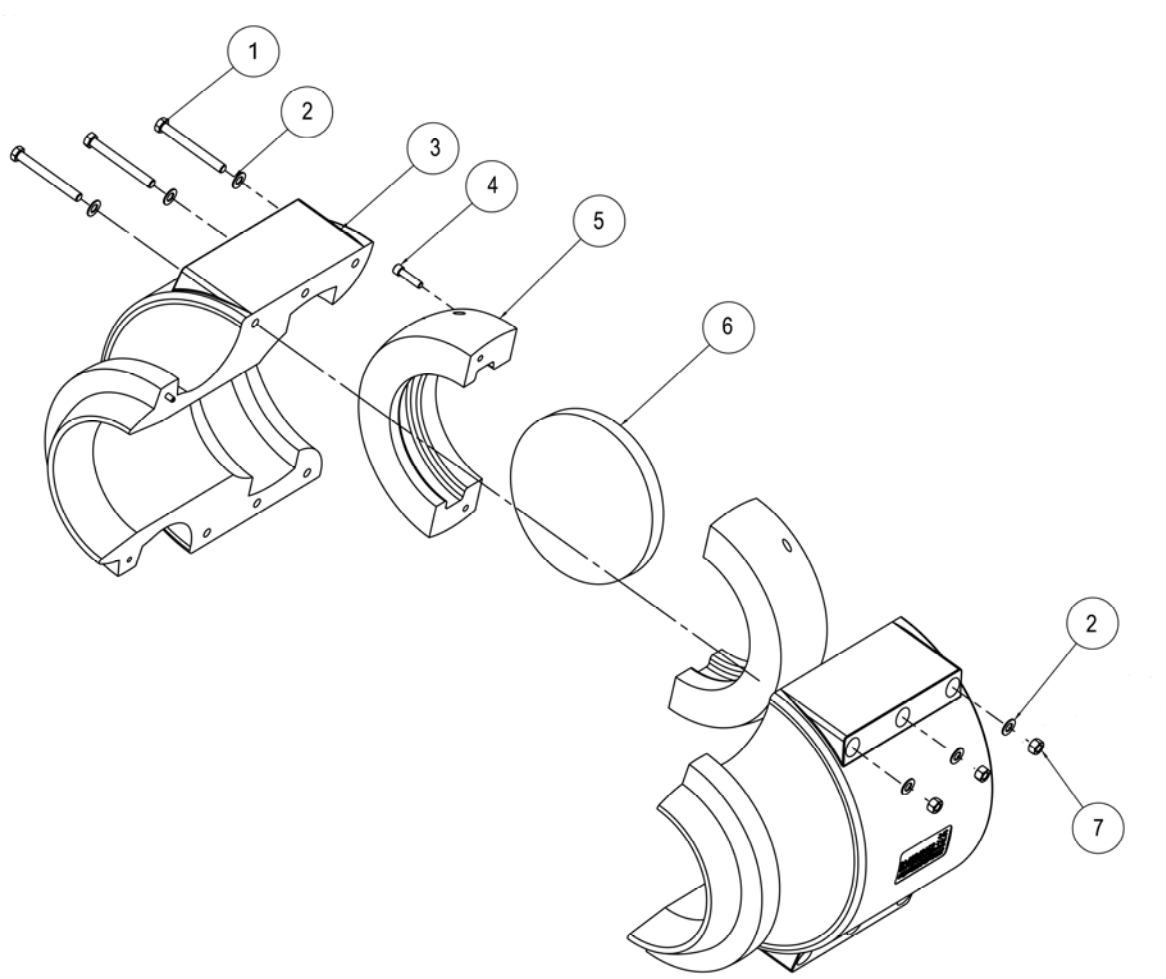

Item NO.	Part Number	Description
1	STOCK ITEM	½-13 UNC x 4½” Hex Head Bolt
2	STOCK ITEM	Ø½ Flat Washer, TY B, Narrow
3	83107809VB	78” LOR - VBR
4	STOCK ITEM	3/8-16 UNC x 1.5” LG, Socket Head Cap Screws, ASTM A574
5	W10052901	Technip (BP) Macondo 4” Flexible Interface adaptor
6		(Technip) 4” Vertebrae connection ring
7	STOCK ITEM	½-13 UNC Nylon Insert Nut, 316 SS
Note: VBR Assembly will be provided with 316 SS hardware.		

Read carefully! Failure to follow procedure may damage components and will void all warranties.

1. Required Tools:

1. ¾” Socket [19 mm also works]
2. Ratchet Wrench or Air Tool
3. Torque Wrench
4. Loctite Marine Grade (P/N: 34026) lubricant or similar
5. Wire brush (matched to bolt material)
6. 5/16” Allen wrench [8 mm also works]
7. Socket set extension bar, 5”+ [127mm+] recommended

2. Preparation Work

1. Check material
2. Set Torque Wrench to the appropriate torque value listed in Table 1.

3. VBR String Make-up Procedure

This procedure will take you though the installation of a complete VBR string. Each VBR string consists of three types of components; the VBR Interface Adaptor (PN: W10052901 rev A), the VBR (PN: 83107809VB rev A), and the VBR End Cap (PN: 83107809EC rev A). All pieces are manufactured in half pieces and must be installed around the Flexible to provide protection against kinking. Each half is bolted to the opposite half of the segment though a pattern of counter bored bolt holes. Refer to Table 1 for the appropriate hardware and installation torque to be used for each VBR. Below follows the generic steps to assembling a VBR string onto a Flexible.

Table 1 – Schedule of Hardware

∅8" 78” LOR VBR		
Item	Mat.	Details
Bolt (qty)	As-supplied[2]	1/2"-13 UNC 4 1/2" LG, Hex Head bolt (6)
Bolt Torque lubricated[1]	316 SS (UNS S31600)	45 ft-lb [61 N-m]
	SAE Grade 2	45 ft-lb [61 N-m]
	SAE Grade 5	50 ft-lb [67.8 N-m]
	SAE Grade 7	50 ft-lb [67.8 N-m]
	Super Duplex	50 ft-lb [67.8 N-m]
Washer (qty)	As-supplied[2]	1/2" Flat Washer, TY B, Narrow, (12)
Lock nut (qty)	As-supplied[2]	1/2"-13 UNC Nylon Insert Nut (6)

Note: 1) Torque calculations assuming Loctite 34026 (Anti-seize) for lubrication.
2) The hardware supplied will be 316 SS, other grades are listed in case there is a change in the field.

Read carefully! Failure to follow procedure may damage components.

WARNING

Each VBR (PN 83107809VB) & Interface Adaptor (PN: W10052901) is heavy (~45 lb [20.4 kg]), use two persons to lift each half and do not allow fingers to be pinched when joining halves together. Caution, the Interface Adaptor and VBR's are heavy and will crush fingers if not handled properly.

1. Using two persons, remove the 3/8-16 Socket Head Cap Screws from the interface adaptor. You will be removing 2 Socket Head Cap Screws total.

2. Using two persons, place one Interface Adaptor half onto the Technip 4" Vertebrae Connection Ring (PN: GSxxx rev A). The VBR Adaptor is designed to only go on the connection ring one way, if the part does not fit, flip the adaptor over, as you have it on backwards. Then place the other half of the Interface Adaptor on the Connection Ring (PN: GSxxx rev A).

3. Reinstall the 3/8-16 Socket Head Cap Screws using 35 ft-lb [47.45 N-m] torque. Note: The 3/8" bolts are installed for ease of installation, the VBR hardware will keep the assembly functional.

4. Place the socket (see Figure 3) of a VBR half around the VBR Interface Adaptor (see Figure 1), ensuring that the Interface Adaptor lies within the VBR socket groove.

5. If necessary, clean the bolt threads with a stainless steel wire brush and apply lubricant to the threads.

CAUTION

If you are using stainless steel bolts, only use a stainless steel wire brush. Using a carbon steel brush on stainless bolts will cause rapid corrosion.

6. Insert Hex Head Bolts into the VBR bolt holes. Refer to Table 1 for Torque values.

a. Ensure each bolt has a Flat Washer between the head of the bolt and the VBR.

b. Ensure each nut has a Flat Washer installed between the nut and the VBR.

7. Using a second man, place the socket of the second VBR half around the Interface Adaptor ensuring that the VBR halves are properly aligned and come face to face, see Figure 1.

8. Place a Flat Washer and then a Locking Hex Nut onto each of the protruding bolts.

9. Screw each bolt (6 total) into the nuts until they are hand tight using the Socket.

10. Repeat procedure for the remaining VBR bolt holes.

11. Using the torque wrench, torque all bolts to the specified torque listed in Table 1.

12. Inspect the assembled VBR segment by rotating it about the flexible. Proper installation will offer no resistance and should spin freely. The VBR installed over the VBR Interface adaptor may have a snug fit, this is acceptable.

13. Make-up the next VBR pair as follows: Locate a VBR pair to install.

14. Place the VBR groove (see Figure 3) of a VBR half around the previously installed VBR rib (see Figure 3).

15. Repeat steps 8-14 for the remaining VBR halves until the required quantity of VBR segments have been installed per job specifications and string assembly quantities. Refer to shipping documentation or the specific assembly diagram for the particular job.

16. Assemble the VBR End Cap (PN 83107809EC) onto the last VBR segment following steps 14-15 for the VBR End Cap.

17. Inspect the assembly to ensure that the Interface Adaptor, VBR End Cap, and correct quantities of VBR segments have been installed per job specifications. Refer to shipping documentation or project General Assembly print.

18. Inspect the Flexible to ensure that it is functioning properly and that it is free of kinks and obstructions.

You have now completed the assembly of a complete VBR string.

Figure 2 - VBR End Cap Termination

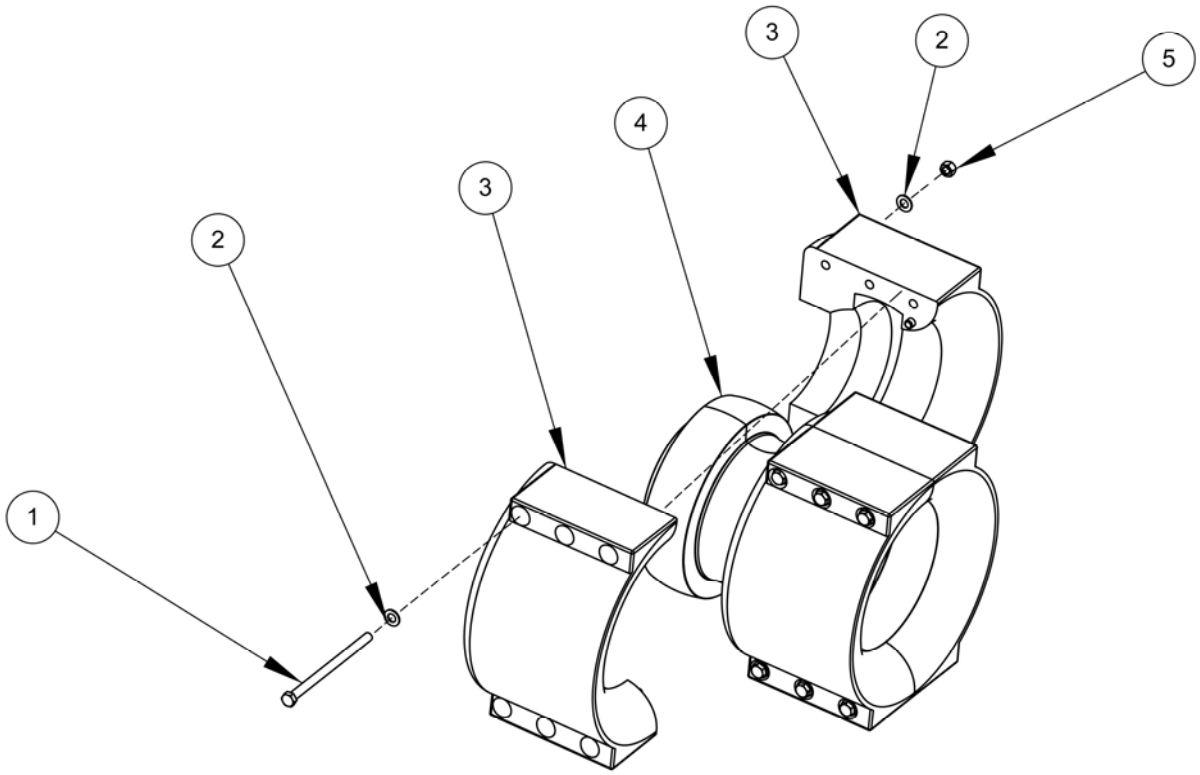

Item NO.	Part Number	Description
1	STOCK	½”-13 UNC X 4 ½” HEX HEAD BOLT
2	STOCK	∅ 1/2” FLAT WASHER, NARROW, TY B
3	83107809EC	VBR END CAP
4	83107809VB	78” Min. LOR – VBR (Shown as an assembled set)
5	STOCK	½-13 UNC Nylon Insert Nut

4. Appendix

Figure 3 - Generic VBR String Assembly Diagram

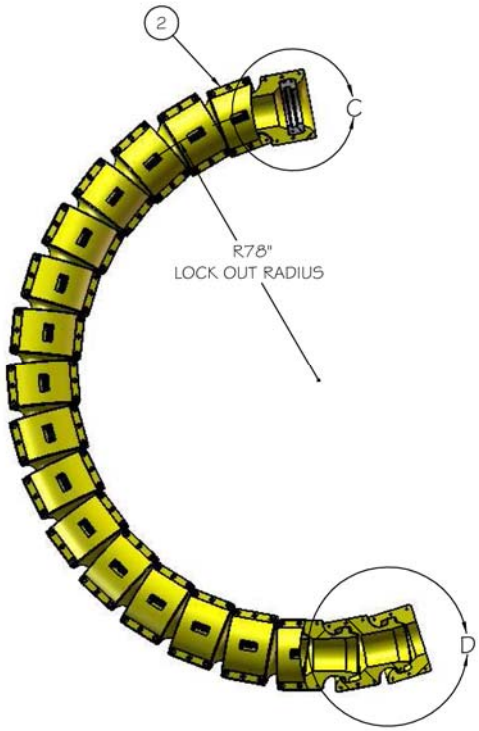

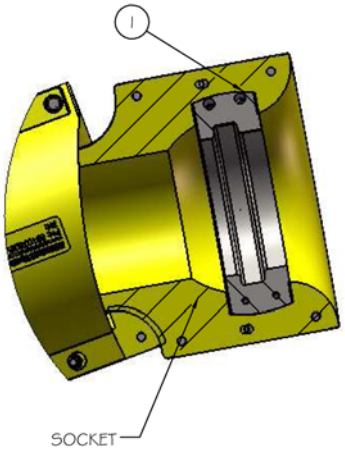

DETAIL C
SCALE 1 : 12

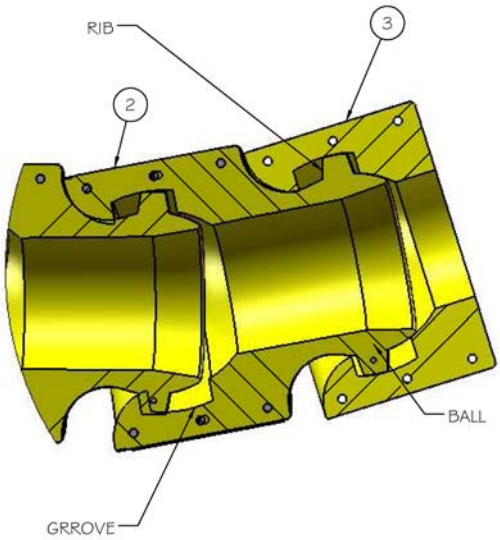

DETAIL D
SCALE 1 : 12

Item NO.	Part Number	Description
1	W10052901	8” VBR Interface Adaptor
2	83107809VB	VBR (half)
3	83107809EC	VBR End Cap (half)

Attachment 5: Upper 6-in Flexible Jumper Data Sheet

Technip FLEXI FRANCE	STRUCTURE 2.4 - TECHNICAL DATA SHEET **REFERENCE: 152.61433 REV. 0** IN DATABASE SINCE 3/27/2008	Page : 1 / 1 Job n° : Name : MHENSE Date : 11/05/2010

INTERNAL DIAMETER	6.00"	SWEET SERVICE
DESIGN PRESSURE	5500 psi	379 bars
DESIGN TEMPERATURE	60 °C	
FACTORY TEST PRESSURE	8250 psi	568 bars
FTP/DP 1.50		

N°	LAYER DESCRIPTION	UTS (MPa)	MYS (MPa)	Mass (Kg/m)	I.D. (mm)	Th. (mm)	SDP (MPa)
1	INTERLOCKED CARCASS 60.0 x 1.5 x 7.5 DUPLEX (FE 04)	660	-	16.91	152.40	7.50	
2	PRESSURE SHEATH RILSAN P40TL TP01			4.44	167.40	7.20	
3	ZETA WIRE 10.0 FI 11	1000	-	40.18	181.80	10.00	380
4	ANTI-WEAR TAPE 75.0 x 1.5 PIPELON (BF 01)			0.91	201.80	1.50	
5	FIRST ARMOUR LAY. FI41 45 Flat wires: 12 x 5 at -30 deg.	1400	-	22.87	204.80	5.00	196
6	ANTI-WEAR TAPE 75.0 x 1.5 PIPELON (BF 01)			0.97	214.80	1.50	
7	SECOND ARMOUR LAY FI41 47 Flat wires: 12 x 5 at 31 deg.	1400	-	24.07	217.80	5.00	238
8	HIGH STRENGTH TAPE G1/PIPELON/KV470/KV470/ESTER/ESTER			1.43	227.80	2.85	
9	EXTERNAL SHEATH HD-FLEX (TP26+TP28) Yellow			4.15	233.50	5.80	

THEORETICAL CHARACTERISTICS	IMPERIAL	METRIC
DIAMETER inside	6.00 in	152.40 mm
DIAMETER outside	9.65 in	245.10 mm
VOLUME internal	0.214 cf/ft	19.85 l/m
VOLUME external	0.508 cf/ft	47.18 l/m
WEIGHT in air empty	77.90 lbf/ft	115.93 kgf/m
WEIGHT in air full of seawater	91.57 lbf/ft	136.28 kgf/m
WEIGHT in seawater empty	45.40 lbf/ft	67.56 kgf/m
WEIGHT in seawater full of seawater	59.08 lbf/ft	87.91 kgf/m
SPECIFIC GRAVITY in sea water empty	2.40	2.40
PRESSURE Nominal bursting	12980 psi	895 bars
HYDROSTATIC collapse pressure lay 2	3843 psi	265 bars
DAMAGING PULL in straight line	1160565 lbf	5162.45 kN
MINIMUM BENDING RADIUS for STORAGE	5.46 ft	1.66 m
BENDING STIFFNESS at 20°C	42089 lbf.ft2	17.39 kN.m2
RELATIVE ELONGATION at design pressure	0.093 %	0.093 %
RELATIVE ELONGATION for 100 kN	0.016437 %	0.016437 %
THERMAL EXCHANGE COEFFICIENT at 20°C	3.97 Btu/hftF	6.87 W/m.K

CONFIDENTIAL - NOT TO DISCLOSE WITHOUT AUTHORIZATION

TECHNIP GROUP - This document contains confidential information. Property of TECHNIP SA – Copyright TECHNIP – All rights reserved.

Attachment 6: Discrete Buoyancy Module Installation Procedure

BP

Maconda CDP Project

Distributed Buoyancy Modules Installation, Storage and Handling Procedure

Document No. SK-W9674-EN-012, Rev 01

Confidentiality Statement

This document contains confidential information.
All rights (including copyright, confidential information, trade secrets and design rights) are owned by Trelleborg Offshore UK Ltd. No use or disclosure is to be made without prior written permission of Trelleborg Offshore UK Ltd. Copyright 2010 Trelleborg Offshore UK Ltd. All rights reserved.

Trelleborg Offshore UK Ltd
Stanley Way, Stanley, Skelmersdale, Lancashire, WN8 8EA, England
Tel: +44 (0) 1695 712000 Fax: +44 (0) 1695 712111 www.trelleborg.com

Revision List

Rev No	Issue Date	Prepared		Checked		Approved	
		Name	Sign	Name	Sign	Name	Sign
01	28/05/10	R Hogarth	R. Hogarth	A Maqbool	AM	J Harrison	Jason Harrison.

This document contains confidential information. All rights (including copyright, confidential information, trade secrets and design rights) are owned by Trelleborg Offshore UK Ltd. No use or disclosure is to be made without prior written permission of Trelleborg Offshore UK Ltd. Copyright 2010 Trelleborg Offshore UK Ltd. All rights reserved.

Table of Contents

1 Introduction 4
2 References 5
3 Drawings 6
3.1 Buoyancy Element and Clamp Drawings 6
3.2 Ancillaries 6
4 Hydraulic Tool & Ancillaries 7
5 General Arrangement 8
5.1 Internal Clamp 8
5.2 Buoyancy Element 9
6 Handling Guidelines 10
6.1 General Requirements 10
6.2 Internal Clamps 11
6.3 Buoyancy Elements 11
6.4 Buoyancy Element Disassembly 12
7 Storage 13
8 Internal Clamp Installation 14
8.1 Pre-Assembly Checks 14
8.2 Crossbar Clearance Measurement Check 15
9 Internal Clamp Removal 16
10 Buoyancy Element Installation 16
11 Buoyancy Element Removal 17

Appendix A – Internal Clamp Installation 18
Appendix B – Internal Clamp Removal 28
Appendix C – Buoyancy Element Installation 33

This document contains confidential information. All rights (including copyright, confidential information, trade secrets and design rights) are owned by Trelleborg Offshore UK Ltd. No use or disclosure is to be made without prior written permission of Trelleborg Offshore UK Ltd. Copyright 2010 Trelleborg Offshore UK Ltd. All rights reserved.

1 Introduction

BP have placed an order with Trelleborg Offshore UK Ltd (TOUK) for the design, manufacture & supply of Distributed Buoyancy Modules c/w internal clamps & handling straps for their Maconda CDP Project.

The purpose of this document is to present the installation, storage and handling procedure for the internal clamps and the buoyancy elements associated with all design types.

PLEASE NOTE: **The procedural information given in this document is for guidance only, the final method of assembly is to be determined by the installation contractor.**

This document contains confidential information. All rights (including copyright, confidential information, trade secrets and design rights) are owned by Trelleborg Offshore UK Ltd. No use or disclosure is to be made without prior written permission of Trelleborg Offshore UK Ltd. Copyright 2010 Trelleborg Offshore UK Ltd. All rights reserved.

2 References

The following documents have been referenced in this report: -

Ref. 1	Trelleborg Offshore UK Ltd.	Internal Clamp Design Report [TBC]
Ref. 2	Trelleborg Offshore UK Ltd.	Buoyancy Element Design Report [TBC]
Ref. 3	Trelleborg Offshore UK Ltd.	Hydraulic Tool Operating Manual 1005-PR-018

This document contains confidential information. All rights (including copyright, confidential information, trade secrets and design rights) are owned by Trelleborg Offshore UK Ltd. No use or disclosure is to be made without prior written permission of Trelleborg Offshore UK Ltd. Copyright 2010 Trelleborg Offshore UK Ltd. All rights reserved.

3 Drawings

3.1 Buoyancy Element and Clamp Drawings

DWG NO	DRAWING TITLE
C433535	Internal Clamp Body
C433536	Internal Clamp Strap
C433537	Internal Clamp Fastener
C433538	Internal Clamp General Arrangement
C433540	Element External Shell
C433541	Element Securing Strap
C433542	General Arrangement
TBC	Packing Arrangement

Table 3-1

3.2 Ancillaries

3.2.1 Clamp Installation tools

DWG NO	DRAWING TITLE
B418603	M24 Locknut Spanner
B418610	M24 Driver

Table 3-2

3.2.2 Element Installation tools

DWG NO	DRAWING TITLE
B418614	M12 Locknut Spanner
B418618	M12 Driver

Table 3-3

This document contains confidential information. All rights (including copyright, confidential information, trade secrets and design rights) are owned by Trelleborg Offshore UK Ltd. No use or disclosure is to be made without prior written permission of Trelleborg Offshore UK Ltd. Copyright 2010 Trelleborg Offshore UK Ltd. All rights reserved.

4 Hydraulic Tool & Ancillaries

The hydraulic tool comprises a strongback supporting a hydraulic ram at one end and a fixed anvil at the other. To these are attached jaw bodies, suitable for set distances between clamp fasteners. Individual jaws fixed on the jaw bodies provide an interface with the correct diameter of cross bar. Refer to 1005-PR-018 (Ref. 3) for the Operating Manual for the Hydraulic Tool.
All of the internal clamps have a 1-part strap which requires the use of only one hydraulic tool. The installations will be carried out with a 20 te capacity tensioning tool.
The tools provided are:

1. Air-driven Hydraulic Power Pack – See 1005-PR-018 for details.
2. 20 Te Capacity Hydraulic Tensioning Tool
3. Fixed Jaw Bodies
4. Moving Jaw Bodies
5. Jaw End Effectors
6. Locknut Latch Mechanisms
7. Calibration Bars
8. Hydraulic Hoses.

The types of ancillaries required are as follows.

Clamp Component	SPECIFICATION
Fixed Jaw Body	M24-185-Fnnn
Left Hand Fixed Jaw	M24-50-FLH-nnn
Right Hand Fixed Jaw	M24-50-FRH-nnn
Moving Jaw Body	M24-185-Mnnn
Left Hand Moving Jaw	M24-50-MLH-nnn
Right Hand Moving Jaw	M24-50-MRH-nnn
Calibration Bar	50-245

Table 4-1

These are designed to suit the following strap/crossbar/fastener configuration:

- M24 x 180mm fasteners
- Ø50mm Crossbars, 245mm Long, 185mm Hole Centres

Note: In, Table 4-1“nnn” represents serial numbers for traceability purposes.

The calibration bars serve two purposes, firstly to act as a spacer between the jaws when setting the power pack relief valve, and secondly to align the Locknut Latch Mechanisms.

This document contains confidential information. All rights (including copyright, confidential information, trade secrets and design rights) are owned by Trelleborg Offshore UK Ltd. No use or disclosure is to be made without prior written permission of Trelleborg Offshore UK Ltd. Copyright 2010 Trelleborg Offshore UK Ltd. All rights reserved.

5 General Arrangement

Each buoyancy module is assembled from two discrete components:-

1. Internal clamp
2. Buoyancy element(s)

5.1 Internal Clamp

The function of the internal clamp is to fix the position of the buoyancy module on the riser. It achieves this by transferring the circumferential load in the strap into a radial load which bears onto the riser.

The internal clamp is assembled from the following items:-

1. Clamp body
2. Securing strap
3. Securing strap fasteners

The clamp body is a segmented annular spacer that bears directly onto the riser external sheath. The outer surface of the body is provided with a groove into which the securing strap is accommodated.

The securing strap is a flat circumferential band, the free ends of which are fitted with a transverse cross bar. These cross bars are drawn together by a set of fasteners. Particulars for the internal clamps are given in Table 5-1.

Line Designation	No. of Segments	Strap Details	X-Bar Details	Fastener Details	Clamp Weight
Ø245.1mm Riser	4	125 x 3.5mm	Ø50 x 245mm	M24 x 180 Long	30.1 kg

Table 5-1

This document contains confidential information. All rights (including copyright, confidential information, trade secrets and design rights) are owned by Trelleborg Offshore UK Ltd. No use or disclosure is to be made without prior written permission of Trelleborg Offshore UK Ltd. Copyright 2010 Trelleborg Offshore UK Ltd. All rights reserved.

5.2 Buoyancy Element

The function of the buoyancy element is to impart an up-thrust to the riser in order to hold the line in the desired orientation. The element is buoyant by virtue of the fact that a material (syntactic foam) which has a specific gravity of less than 1.0 occupies its core.

The buoyancy element is assembled from the following items:-

1. Element halves
2. Securing straps
3. Tensioning assemblies

The buoyancy element is cylindrical in shape but is split into two identical halves so as to allow the unit to be fitted around the riser.

The internal geometry of each half is also provided with a recess that allows engagement with the internal clamp. Two longitudinal holes are present in each half and these may be used for handling and lifting the component.

The external surface of the element is provided with a set of circumferential recesses. It is into these recesses that the securing straps are fitted. The free ends of these straps are drawn together by a tensioning assembly.

The principal particulars for the buoyancy elements are shown in Table 5-2.

Line Designation	Element Height	Element Diameter	Element Weight*	No. of Straps	Tensioner Size	Module Weight**
Ø245.1mm Riser	1085 mm	Ø1270 mm	308.2 kg	2	M12	652.9 kg

Table 5-2

NOTE:-

*Element weight = 1 Half Shell
**Module Weight = 2 No. Half Shell plus clamp, strap and fasteners

This document contains confidential information. All rights (including copyright, confidential information, trade secrets and design rights) are owned by Trelleborg Offshore UK Ltd. No use or disclosure is to be made without prior written permission of Trelleborg Offshore UK Ltd. Copyright 2010 Trelleborg Offshore UK Ltd. All rights reserved.

6 Handling Guidelines

6.1 General Requirements

The polyethylene skin of the buoyancy element is a relatively tough material but it can be subject to abrasion against hard rough surfaces. Minor surface damage will not impair the function of the element but it should be avoided. The element and internal clamp should be handled by fork truck with the forks bearing directly onto the shell or wooden skids provided, minimising any dragging or pushing.

The element and internal clamp should not be dropped or handled roughly as this may damage the syntactic foam interior or the internal clamp (without any apparent external damage).

The guidelines for handling of the buoyancy Element and Clamp are summarised below: -

DO:-

1. Lift the element and internal clamp one at a time unless using a purpose built spreader bar.
2. Pull horizontally by soft slinging around the circumference of the element.

DO NOT:-

1. Disassemble until required for installation.
2. Allow the element and internal clamp to be dropped onto or be 'bumped' into hard or protruding objects.
3. Roll element and internal clamp around the ground (this may damage the element and internal clamp).
4. Subject to excessive loadings - do not stack more than two high.
5. Use grappling hooks in the securing straps or lift by these straps or the securing strap tensioning assemblies.
6. Lift the element and internal clamp through their internal bore.

Safety Note!

The element skin (polyethylene) is very "slippery". Always ensure the elements are well secured prior to transportation.

This document contains confidential information. All rights (including copyright, confidential information, trade secrets and design rights) are owned by Trelleborg Offshore UK Ltd. No use or disclosure is to be made without prior written permission of Trelleborg Offshore UK Ltd. Copyright 2010 Trelleborg Offshore UK Ltd. All rights reserved.

6.2 Internal Clamps

1. The clamp body is manufactured from an epoxy composite. Avoid impact loads as this may chip the component. Handle with due care at all times.

2. Handle the strap fasteners with care so as to avoid damage to the thread form.

3. When opening the clamp to fit over the riser avoid over extending as this may deform the securing strap.

4. Ensure that the clamp assembly remains clean. Contamination of the thread forms with foreign material may inhibit the proper tensioning of the clamp.

5. Do not under any circumstances apply lubricants to any clamp components other than the material supplied by Trelleborg specifically for this purpose.

6. Tension fasteners and locknuts with titanium tools.

7. Do not fully tension the clamp fasteners using air driven tools.

8. Do not remove the locking nuts from the fasteners.

6.3 Buoyancy Elements

1. The buoyancy element contains a syntactic foam core. So as to prevent internal damage avoid impact loadings and handle with due care at all times.

2. Each buoyancy element half is provided with 2 No ∅30 mm longitudinal openings to assist with the lifting and handling of the components.

3. Handle the tensioning assemblies with care so as to avoid damage to the thread forms.

4. The tensioning assemblies are manufactured from super duplex stainless steel. Avoid contact with carbon steel. Do not lubricate other than with the material supplied by Trelleborg.

5. Apply the specified torque to the tensioning assemblies using the tools supplied. The use of air driven tools is not recommended.

6. Do not disassemble tensioning assemblies unless absolutely necessary. It should be possible to fit straps and engage the tensioner without doing so.

7. Ensure that securing straps do not come into contact with corrosive liquids (e.g. oils, acids etc).

This document contains confidential information. All rights (including copyright, confidential information, trade secrets and design rights) are owned by Trelleborg Offshore UK Ltd. No use or disclosure is to be made without prior written permission of Trelleborg Offshore UK Ltd. Copyright 2010 Trelleborg Offshore UK Ltd. All rights reserved.

6.4 Buoyancy Element Disassembly

The buoyancy modules are supplied in two parts, internal clamps and buoyancy elements. The elements are normally in pairs on skids with the element securing straps and tensioning assembly holding them together. The internal clamp is contained in the element's internal recess. Before the element can be fitted to the riser it must be disassembled into its component parts. When doing so the procedure below should be employed.

1. Cut the plastic bands that secure the buoyancy module to the transportation skids.

2. Remove the buoyancy element from the transportation skids.

3. Remove the element securing straps and tensioning assembly from around the buoyancy element.

4. Carefully separate the two element halves. When the elements are separated enough to allow access to the clamp, the clamp should be secured and lifted out.

5. The buoyancy module is now ready for final assembly.

This document contains confidential information. All rights (including copyright, confidential information, trade secrets and design rights) are owned by Trelleborg Offshore UK Ltd. No use or disclosure is to be made without prior written permission of Trelleborg Offshore UK Ltd. Copyright 2010 Trelleborg Offshore UK Ltd. All rights reserved.

7 Storage

The polymer materials, which form the buoyancy elements and the internal clamps, are relatively chemically inert, and the metal components are very resistant to corrosion. However, whilst in storage the buoyancy element and internal clamp should not be allowed to come into contact with chemical agents and especially acids, strong alkalis or synthetic oils etc.

The buoyancy element and internal clamp must be stored away from naked flames and strong heat sources, which may severely damage the polymer skin and syntactic, foam interior. The maximum temperature allowable is 45 °C.

The buoyancy element and internal clamp should be covered from direct sunlight when in storage or when awaiting assembly.

To prevent excessive heat build-up the cover should be well ventilated.

The buoyancy element may be stacked up to two high without damage. However, for safety reasons and to prevent damage, stacked elements should be well secured to prevent any movement.

The storage guidelines are summarised below.

	DO:-		**DO NOT:-**
1	Store the buoyancy Element and internal clamp on the transportation skids provided.	1	Place near naked flames.
2	Store under cover.	2	Place near heat sources.
		3	Allow contact with chemicals especially strong alkalis, acids or synthetic oils etc.
		4	Expose to sunlight.
		5	Stack more than two high.

Safety Note!

The element skin (polyethylene) is very ‘slippery’. Always ensure the elements are well secured prior to transportation.

NOTE:-

1. Storage covers are outside of the Trelleborg Scope of Supply.

This document contains confidential information. All rights (including copyright, confidential information, trade secrets and design rights) are owned by Trelleborg Offshore UK Ltd. No use or disclosure is to be made without prior written permission of Trelleborg Offshore UK Ltd. Copyright 2010 Trelleborg Offshore UK Ltd. All rights reserved.

8 Internal Clamp Installation

The internal clamps are to be installed using 1 No. hydraulic tool. Refer to 1005-PR-018, (Ref. 3), for operating instructions. The installation procedure is detailed in Appendix A – Internal Clamp Installation.

The illustrations and description given refer to a vertical installation procedure for the assembly of the internal clamps around the riser. These are guidelines only. The clamps may be installed onto a riser which is at an angle offset from vertical. In this orientation the hydraulic tensioning tool must be slung so that it is offered up square to the internal clamps.

IMPORTANT : the tensioning tool must be slung in such a manner that no secondary loads (eg. resulting from vessel wave motion etc.) are imparted to the internal clamp and riser during installation. Failure to do so may result in irreparable damage to the clamp and / or riser. Trelleborg suggest use of a bungee sling or similar to accommodate any potential movement of the tool relative to the riser / clamp. It is the installation contractors' responsibility to review and implement an installation procedure which satisfies these criteria.

The pertinent points described in the guidelines should be adopted whatever the installation method. The final method of assembly is outside Trelleborg's supply and as such the actual assembly, installation procedure and sequence adopted is the responsibility of the Installation Contractor.

8.1 Pre-Assembly Checks

When the internal clamp has been removed from the surrounding buoyancy element conduct the following before installing.

1. Confirm that the internal clamp is of the correct type. Refer to project specific marking stencilled on to the clamp body which refer to the project number and line designation.
2. Visually examine the clamp and ensure that it has not sustained any damage.
3. Ensure that the appropriate tools are available.
4. Dis-engage 2 No. fasteners from the cross bar so that the clamp may be opened.
5. Run the locking nuts up the fasteners so that the protruding thread is equal to the strap crossbar diameter.
6. Examine the fastener threads and area under the fastener head and nuts and ensure that they are adequately lubricated. Re-apply lubricant (Molykote D paste) liberally if required.

NOTES:

1. The internal clamps must be installed using titanium tooling.
2. Torquing of internal clamp fasteners is to be conducted with the aid of calibrated torque wrenches. Torque wrenches are not a Trelleborg supplied item. However, Trelleborg do recommend the use of dial indicator type wrenches.

This document contains confidential information. All rights (including copyright, confidential information, trade secrets and design rights) are owned by Trelleborg Offshore UK Ltd. No use or disclosure is to be made without prior written permission of Trelleborg Offshore UK Ltd. Copyright 2010 Trelleborg Offshore UK Ltd. All rights reserved.

3. Trelleborg recommends that the Molykote D paste (applied between the titanium strap and clamp body in-house during the Internal Clamp assembly procedure) is re-applied if the date of installation of the clamp exceeds a period of 6 months post delivery.
4. To account for inaccuracies in the strap tension installation process a conservative tolerance factor of 5% will be applied in the clamp calculations (See Ref. 1 & 2).

8.2 Crossbar Clearance Measurement Check

The clearance between the crossbars should be checked at various stages of the installation and noted in Table A3, Appendix A – Internal Clamp Installation. Select a location between the upper and lower fasteners to make the measurements. Figure 1 illustrates the crossbar clearance to be measured. At each installation step shown in Table A3, the same location should be measured.

Crossbar clearance

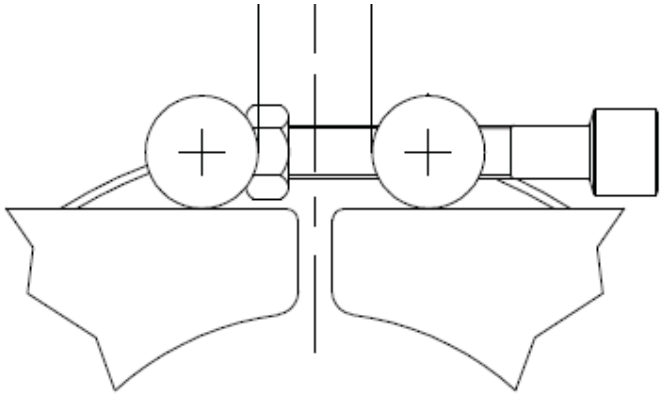

Figure 1

This document contains confidential information. All rights (including copyright, confidential information, trade secrets and design rights) are owned by Trelleborg Offshore UK Ltd. No use or disclosure is to be made without prior written permission of Trelleborg Offshore UK Ltd. Copyright 2010 Trelleborg Offshore UK Ltd. All rights reserved.

9 Internal Clamp Removal

At some point it may be required to remove internal clamps from the risers. If this eventuality does arise then removal should be completed in accordance with the guidelines in Appendix B – Internal Clamp Removal. Note that the diagrams are indicative only.

10 Buoyancy Element Installation

The buoyancy elements are installed in accordance with the guidelines in Appendix C – Buoyancy Element Installation

Prior to installation conduct the following checks.

1. Confirm that the buoyancy element is of the correct type.
2. Visually examine the buoyancy element and confirm that it has not sustained any damage.
3. Take each tensioning assembly in turn and run the locking nuts clear of the threaded cross bar.
4. Examine the tensioning assemblies and ensure that the thread forms are properly lubricated. Re-apply lubricant (Molykote D paste) liberally if required.

NOTES:

1. The securing strap tensioning assemblies require to be installed with the aid of tools that are compatible with the tension assembly material.

2. When using a torque wrench in conjunction with a locknut spanner, it should be noted that the torque lever arm may be effectively increased. The torque reading will require to be adjusted to account for this.

This document contains confidential information. All rights (including copyright, confidential information, trade secrets and design rights) are owned by Trelleborg Offshore UK Ltd. No use or disclosure is to be made without prior written permission of Trelleborg Offshore UK Ltd. Copyright 2010 Trelleborg Offshore UK Ltd. All rights reserved.

11 Buoyancy Element Removal

At some point it may be required to remove the buoyancy element from the riser. If this eventuality does arise then removal should be completed in accordance with the following guidelines. Note, the removal process is the reverse of the installation process.

1. Disengage the tensioning assembly locking nuts by rotating clear of the cross bar.
2. Loosen the securing strap by withdrawing the tensioning screw.
3. Disengage one end of the securing strap from the tensioning assembly and remove from the buoyancy element.
4. Repeat for all securing straps present.
5. Remove the first buoyancy element half from the riser.
6. Remove the second buoyancy element half from the riser.

NOTES:

1. Before re-installing the buoyancy element complete the pre-assembly checks presented in Section 10.

This document contains confidential information. All rights (including copyright, confidential information, trade secrets and design rights) are owned by Trelleborg Offshore UK Ltd. No use or disclosure is to be made without prior written permission of Trelleborg Offshore UK Ltd. Copyright 2010 Trelleborg Offshore UK Ltd. All rights reserved.

Appendix A – Internal Clamp Installation

This document contains confidential information. All rights (including copyright, confidential information, trade secrets and design rights) are owned by Trelleborg Offshore UK Ltd. No use or disclosure is to be made without prior written permission of Trelleborg Offshore UK Ltd. Copyright 2010 Trelleborg Offshore UK Ltd. All rights reserved.

Tensioning Tool Settings – Table A1

Riser	Clamp Strap Operating Tension	Installation Tool Applied Tension	Tensioning Tool Pressure Regulator Valve Setting
Ø245.1mm	137.1 kN	150.3 kN	451 Bar / 6539 PSI

Lock Nut Settings – Table A2

Riser	Lock Nut Torque
Ø245.1mm	240 Nm

1. The "installation tension using tensioning tool" is greater than the "tension required in clamp strap" because the tool only directly tensions the strap and not the fasteners. Once the tensioning tool is removed the fasteners will be loaded and stretch. The additional tension is therefore taken up in the elongation of the fasteners.

2. The pressure regulator valve setting on the tensioning tool is the hydraulic pressure which corresponds directly to the tension applied by the hydraulic tool.

3. Pressure regulator valve settings should be set within + 2 bar.

4. Tension tool pressure has been calculated using a series of Trelleborg conducted in house trials to establish the relationship between hydraulic pressure and strap tension.

5. Lock nut torque is based on the difference in strap tension between installation and maximum operating conditions. The applied torque will induce as a minimum the equivalent of half this tension into each fastener.

6. The installation tension can be referenced in the internal clamp design report (Ref. 1).

TRELLEBORG ENGINEERED SYSTEMS

Clamp Installation Tool Settings

Crossbar Clearance

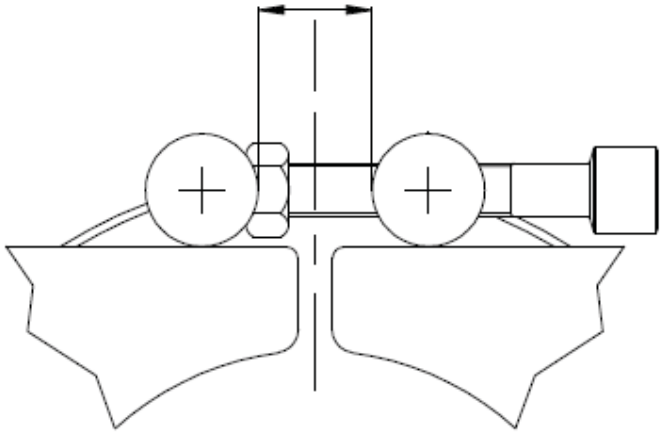

Table A3

Crossbar Clearance Measurement	Clearance (mm)
STEP 13	
STEP 15	
STEP 18	

NOTE:

It is recommended that the crossbar clearance checks are conducted for each clamp to ensure that the strap tension is maintained once the hydraulic pressure is released.

Refer to Section 8.2 Crossbar Clearance Measurement Check.

TRELLEBORG ENGINEERED SYSTEMS

Clamp Installation

Crossbar Clearance Measurements

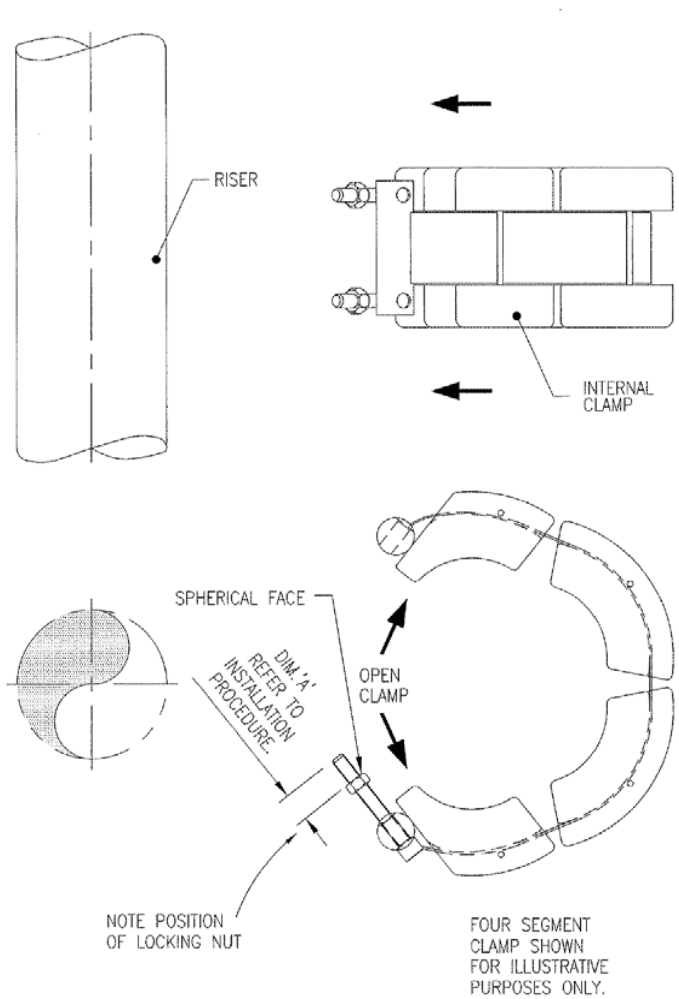

1. Prepare hydraulic tensioning tool in accordance with the Operating Manual (refer to 1005-PR-018 (Ref. 3)), using the ancillaries listed in Table 4-1. Position the correct calibration bar into the **moving** jaws, and advance to position the calibration bar in the fixed jaw.

   Set the locknut latch mechanism to locate around the calibration bars. Advance the moving jaw to load the compression bar and set the regulator valve pressure to the value listed in Table A1. This value should be checked on the digital pressure gauge located on the hydraulic tool. Ensure that all safety guards are in position.
2. Identify the position on the riser at which the clamp will be installed. Inspect the riser surface and ensure that it is clean and in particular free from oil or grease.
3. Open the clamp body and fit around the riser.
4. Locate the clamp at the correct position axially.
5. Insert 2 No. tensioning nuts into the hexagonal recess in the moving jaws with the spherical seats visible. A ball detent will hold them in place.

TRELLEBORG ENGINEERED SYSTEMS

Clamp Installation

1 of 7

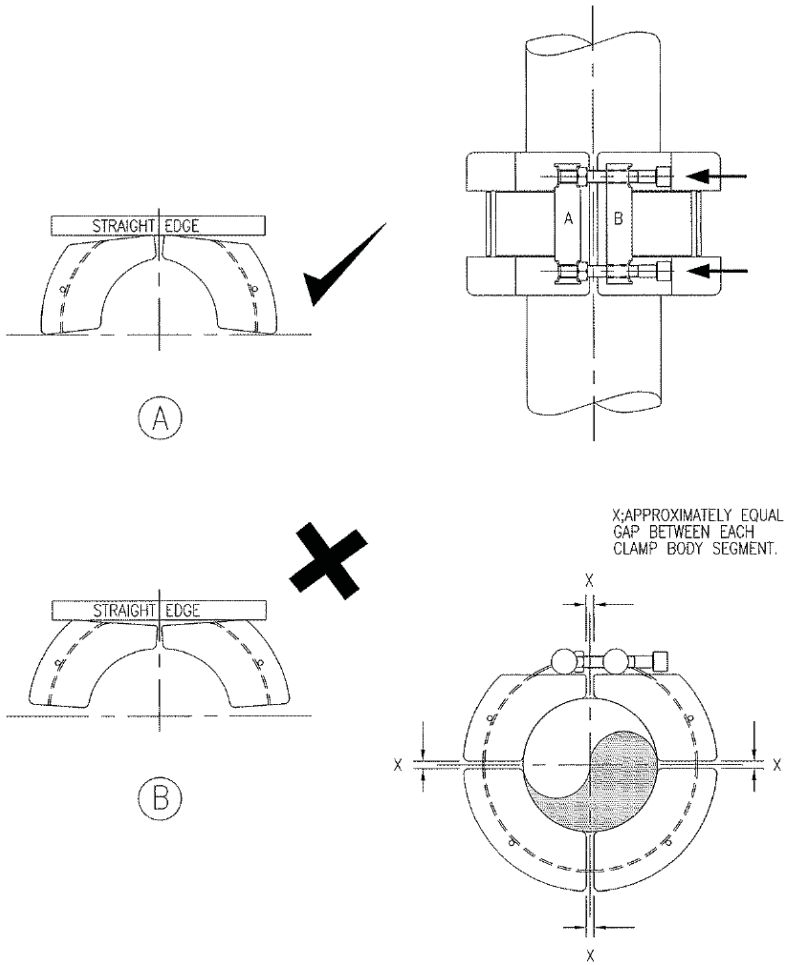

6. Position the clamp body segments such that the flat faces of the segments adjacent to the crossbars are approximately parallel. Ensure the condition shown in Figure (B) does not occur. Ensure that the remaining gaps between the other segments are approximately equal in all cases.

TRELLEBORG
ENGINEERED SYSTEMS

Clamp Installation

2 of 7

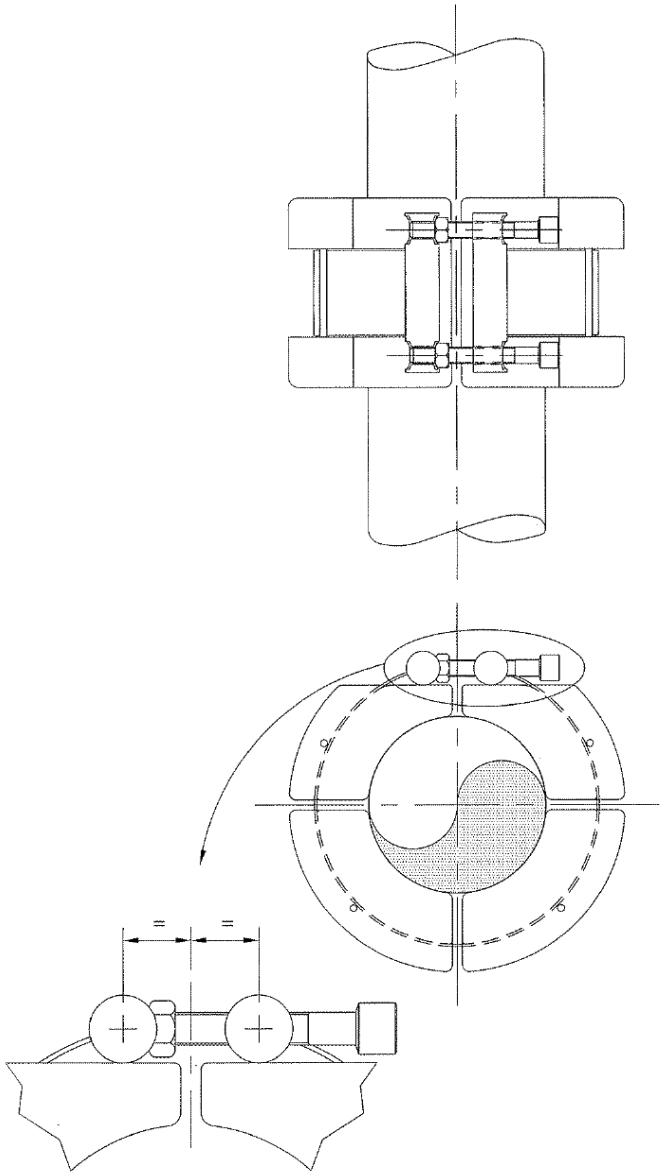

7. Check that the crossbars are located an equal distance either side of the gap between adjacent clamp body segments

TRELLEBORG
ENGINEERED SYSTEMS

Clamp Installation

3 of 7

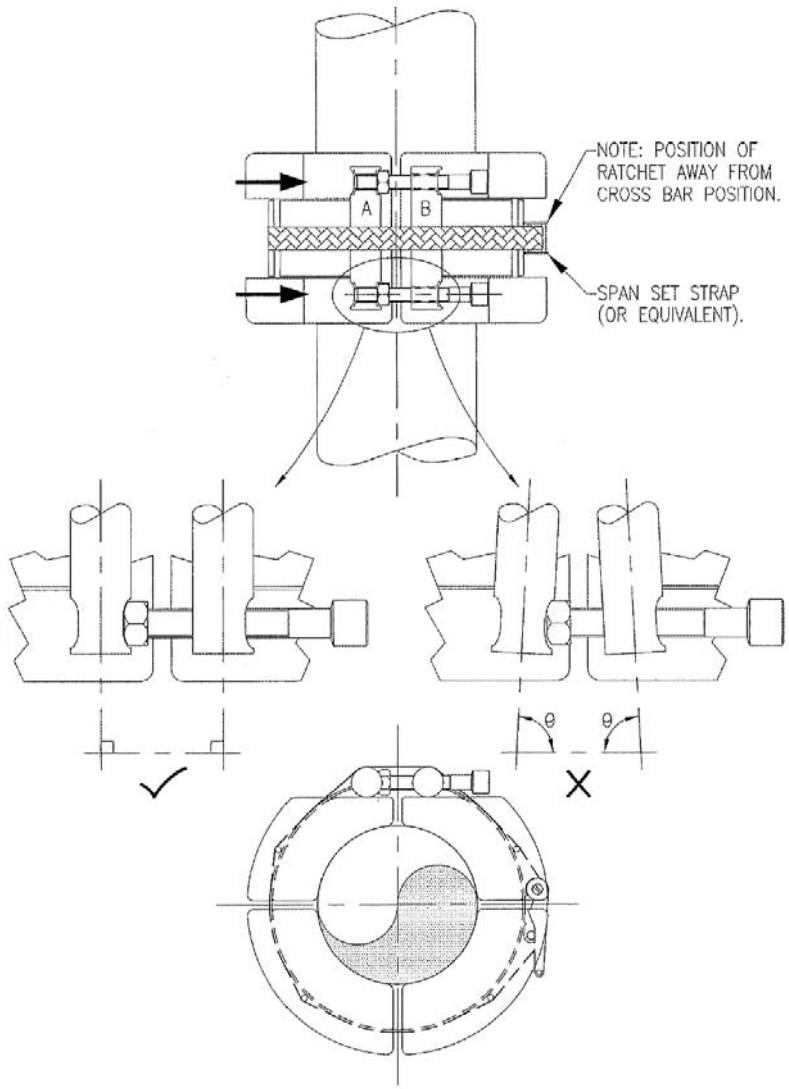

8. Visually examine the securing strap geometry. In particular confirm that cross bars lie approximately parallel to each other. Hold the clamp in position using a cargo strap or equivalent.

TRELLEBORG
ENGINEERED SYSTEMS

Clamp Installation

4 of 7

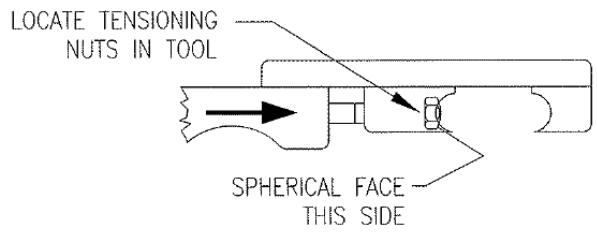

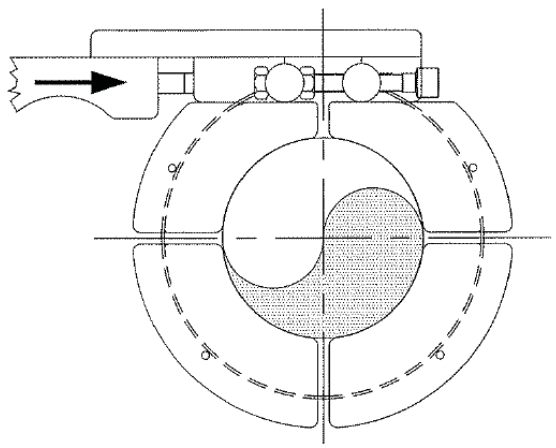

CLAMP FASTENER

9. Check that the pressure gauge on the hydraulic tensioning tool is switched on, and that the power pack is on.

10. Orientate the flats of the Locknuts to receive the latch mechanism. At this point, ensure that the fastener threads do not protrude beyond the outer seat of the crossbar. The locknuts position should be adjusted to allow for this.

11. Locate the tensioning tools over the crossbars. Bring the tool's jaws together using the tool's hand operated valve in the "Advance" position. Check the jaw seats make contact at all points and that the locking nuts are located within the latch mechanisms. Correctly locating the locknut in the latch mechanism prevents the locknut from rotating relative to the tensioning tool.

12. Once the moving jaw is in contact with the crossbar and taken up the slack in the strap, return the hydraulic tool to neutral. Engage the fasteners with the tensioning nuts (note: this process will cause the locknut to be pulled away from the crossbar although still held by the latch mechanism). Apply a torque of 50 Nm to seat the tensioning nuts

13. Measure the crossbar clearance with callipers and a rule and record in table A3.

14. Apply tension to the clamp securing strap with the tensioning tool. Keep the tool's hand operated valve in the "Advance" position. The tensioning tool settings are shown in Appendix A, Table A1

15. Measure the crossbar clearance in the same location as step 13 with callipers and a rule and record in table A3.

TRELLEBORG
ENGINEERED SYSTEMS

Clamp Installation

5 of 7

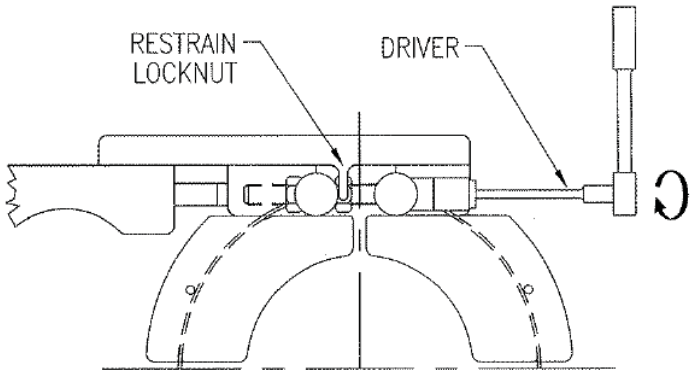

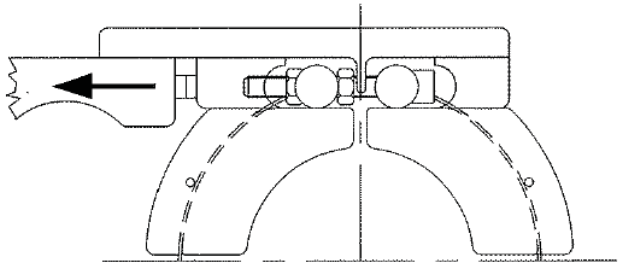

16. Using manual torque wrenches, engage the fasteners until they are seated. During this step the amount of fastener rotations should be counted. The amount of rotations should approximate to the difference between the crossbar gaps measured in steps 15 and 13 divided by the screw pitch (Table 5-1) If the actual rotations are grossly different to the calculated rotations or the rotations differ between upper and lower fasteners then the installation should be repeated
17. Apply a torque of 150 N-m to fully seat the fasteners.
18. Unload the tensioning tool by moving the tool's hand operated valve to the "Retract" position and disengage from the clamp. Measure the crossbar clearance with callipers and a rule and record in table A3. Visually inspect the clamp fasteners to ensure satisfactory installation. Remove spanset or equivalent.
19. The crossbar clearance measured in step 18 should be less than or equal to the crossbar clearance measured in step 15. If not the procedure should be repeated.

TRELLEBORG
ENGINEERED SYSTEMS

Clamp Installation

6 of 7

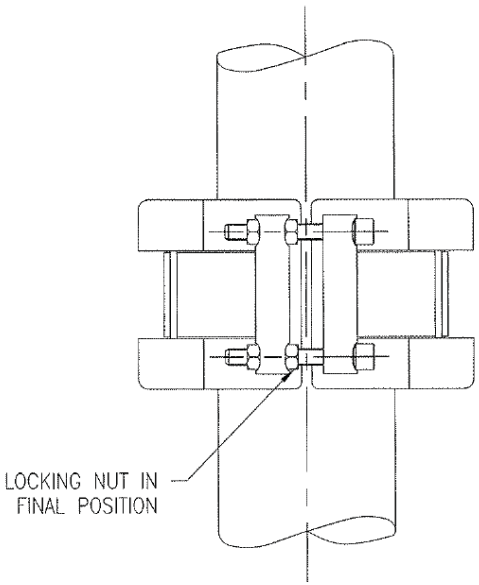

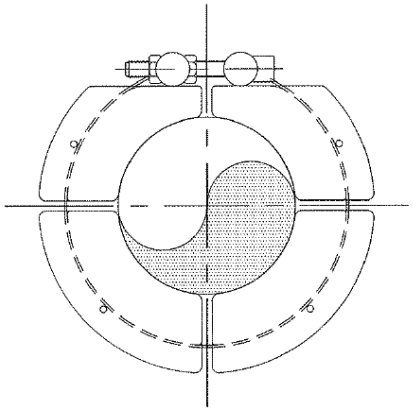

20. Run the locking nuts down the screws until they seat on the cross bar landing.

21. Tighten each of the locking nuts to the torques shown in Table A2. Please note that using a lock nut spanner may increase the lever arm of the torque wrench. The installer should make allowance for this.

22. The installation of the internal clamp is now complete.

NOTES:

1. Should the tensioning process be interrupted or require to be re-applied for any reason, it is imperative that the clamp first be totally de-tensioned.

2. If a successful installation is not achievable after several repeat attempts then the above procedure should be repeated with a higher installation seating torque for step 17. Increase the torque in steps of 50Nm up to a maximum of 300Nm for each repeat attempt.

3. There should be clearance between the clamp segments. If any segments are touching the installation should be repeated.

TRELLEBORG
ENGINEERED SYSTEMS

Clamp Installation

7 of 7

Appendix B – Internal Clamp Removal

This document contains confidential information. All rights (including copyright, confidential information, trade secrets and design rights) are owned by Trelleborg Offshore UK Ltd. No use or disclosure is to be made without prior written permission of Trelleborg Offshore UK Ltd. Copyright 2010 Trelleborg Offshore UK Ltd. All rights reserved.

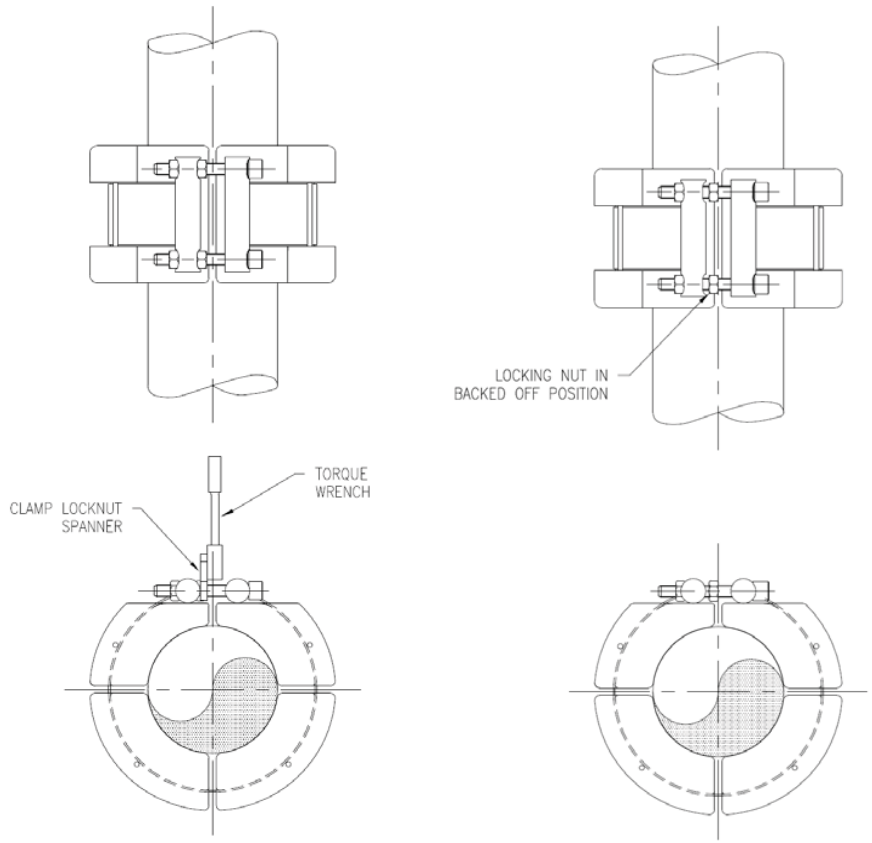

1. Using the correct calibration bar set the tensioning tool pressure to that given in Appendix A, Table A1.
2. Disengage the locking nuts and run them down the screws away from the crossbars by approximately 4 mm. Orientate the lock nuts to receive the tool's latch mechanisms.

TRELLEBORG
ENGINEERED SYSTEMS

Clamp Removal
1 of 4

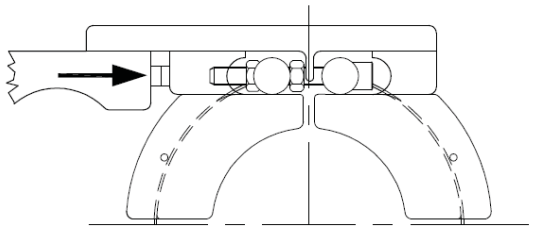

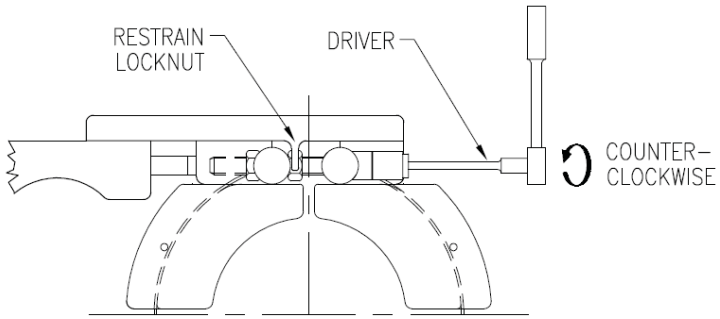

3. Using a straight edge between top and bottom 'Tensioning nuts', orientate the nuts such that the 'flats' of each nut are in the vertical position and parallel to the crossbar. This will ensure smooth engagement of the hexagon jaw body and prevent damage.

4. Offer the tensioning tool up to the crossbars, engaging the crossbar first. Locate the tensioning tool over the fastener heads and crossbars. Check the jaw seats make contact at all points the lock nuts are in the latch mechanism. Ensure pressure gauge is switched on.

5. Apply tension to the clamp securing strap with the tensioning tool. Keep the tool's hand operated valve in the "Advance" position.

6. Undo the fasteners but do not completely remove from the tensioning nuts/crossbar.

7. At this point the clamp should be supported by a secondary means to prevent the clamp from slipping down the riser when the tool is removed

TRELLEBORG
ENGINEERED SYSTEMS

Clamp Removal
2 of 4

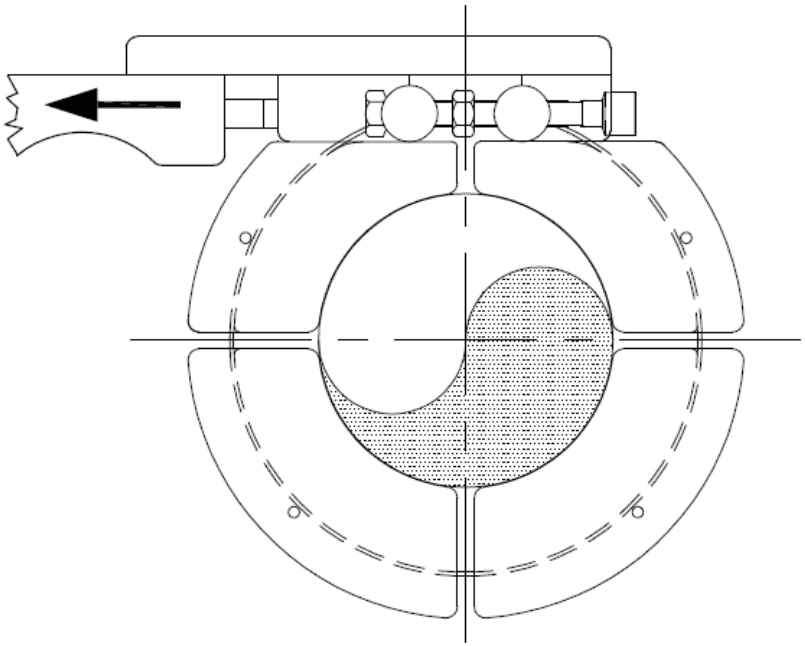

8. Move the tool's hand operated valve to the "Retract" position and unload the tensioning tool and remove from the clamp.

TRELLEBORG
ENGINEERED SYSTEMS

Clamp Removal
3 of 4

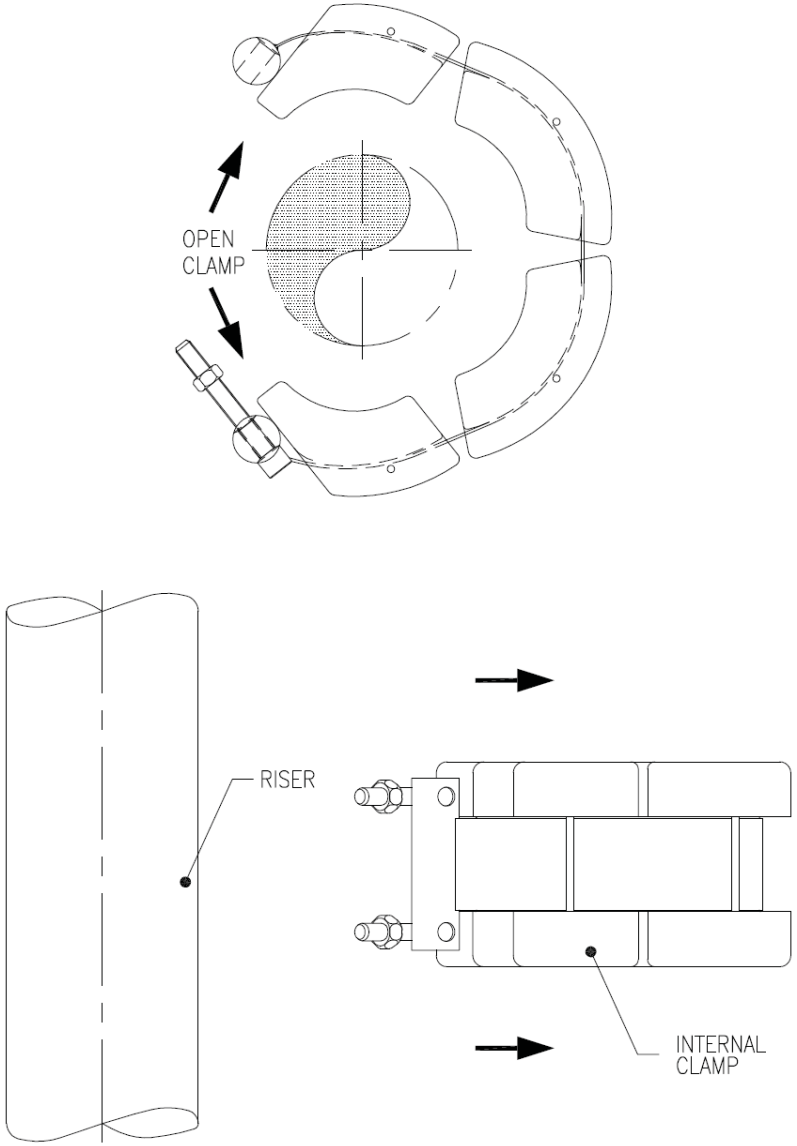

9. Remove fasteners from the crossbar, open the clamp and remove from the riser. Take care not to 'kink' the securing strap. The internal clamp securing strap can be safely reused.

NOTES:

1. Before re-installing the internal clamp complete the pre-assembly checks presented in Section 8.1 Pre-Assembly Checks.

2. Trelleborg requires that the internal clamps are to be uninstalled only with titanium tools.

TRELLEBORG
ENGINEERED SYSTEMS

Clamp Removal
4 of 4

Appendix C – Buoyancy Element Installation

This document contains confidential information. All rights (including copyright, confidential information, trade secrets and design rights) are owned by Trelleborg Offshore UK Ltd. No use or disclosure is to be made without prior written permission of Trelleborg Offshore UK Ltd. Copyright 2010 Trelleborg Offshore UK Ltd. All rights reserved.

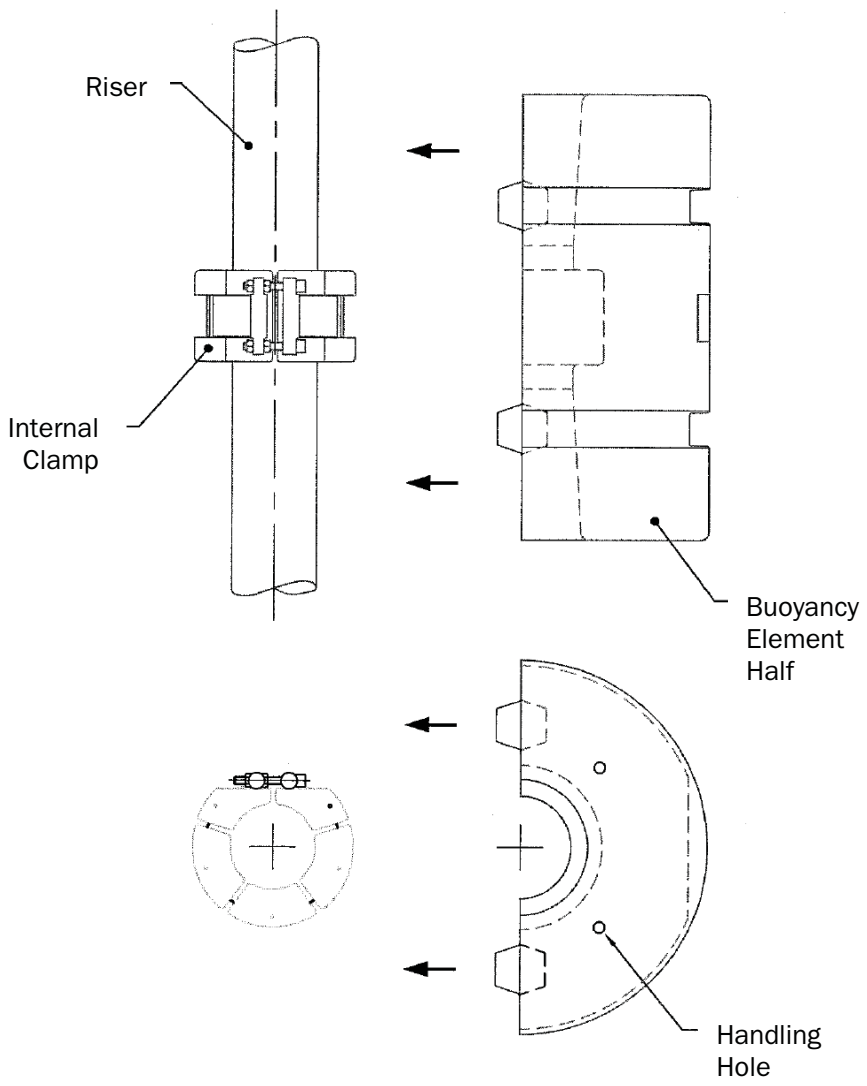

1. Fit the first buoyancy element half around the riser/internal clamp

TRELLEBORG
ENGINEERED SYSTEMS

Buoyancy Element Installation
1 of 8

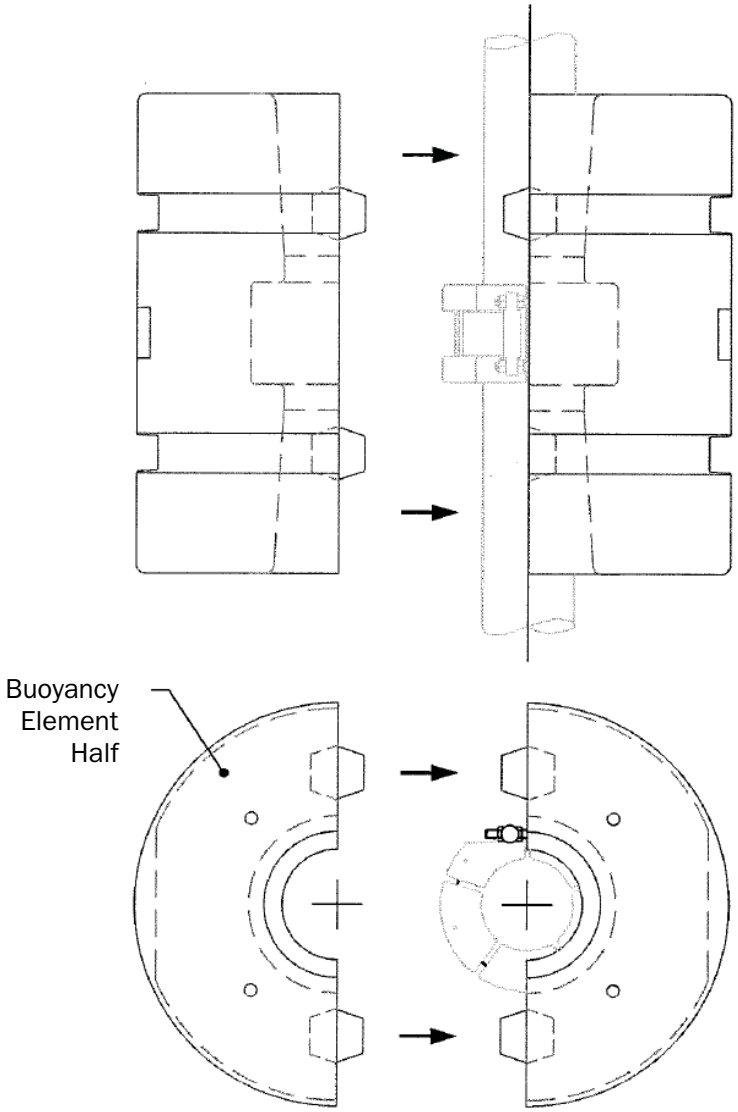

2. Fit the second buoyancy element half around the riser/internal clamp. A cargo strap or similar may be used as a temporary aid to pull the element halves together prior to fitting the securing straps.

TRELLEBORG
ENGINEERED SYSTEMS

Buoyancy Element Installation
2 of 8

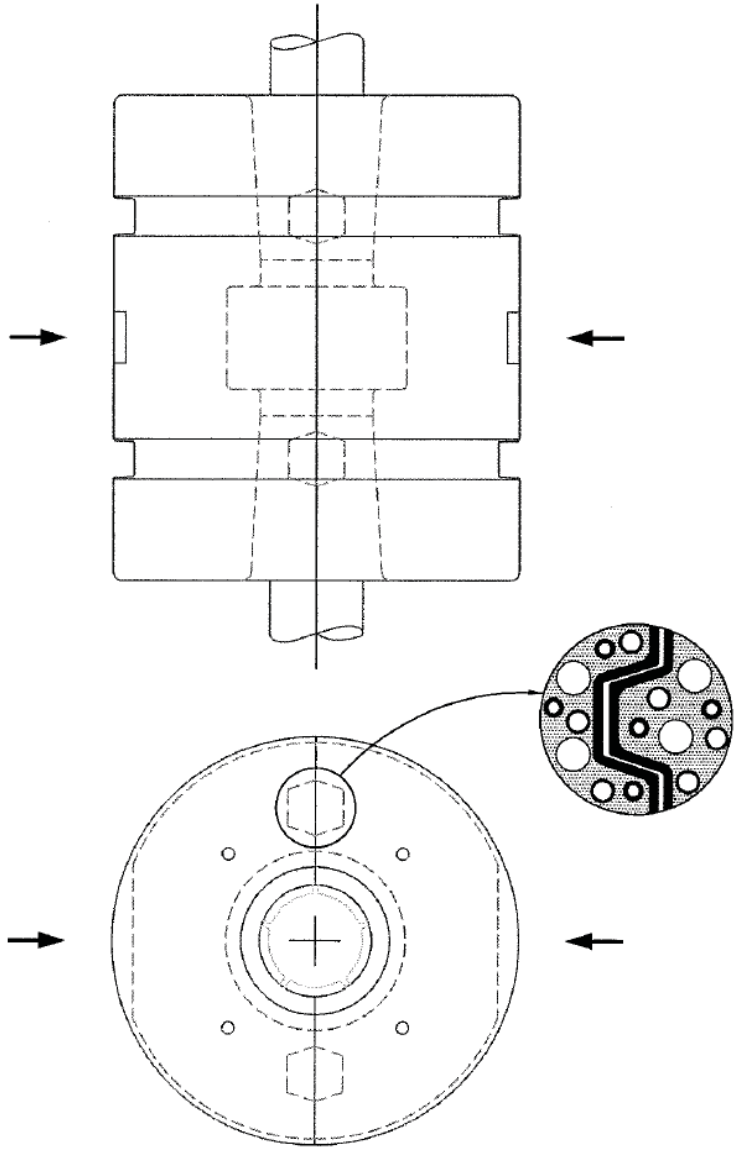

3. Ensure that the spigot and sockets on opposing element halves are properly engaged.

TRELLEBORG
ENGINEERED SYSTEMS

Buoyancy Element Installation
3 of 8

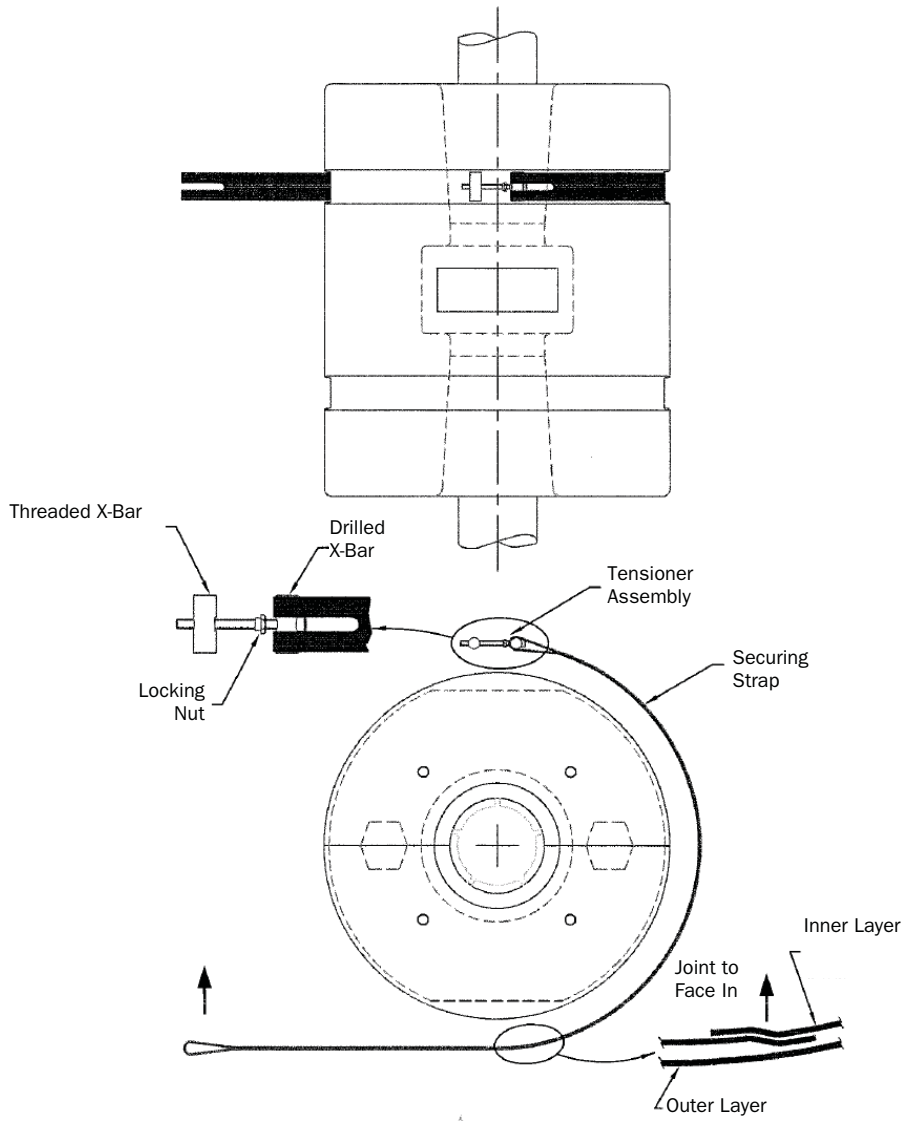

4. Take a tensioning assembly and fit the drilled cross bar into the free end of a securing strap.

5. Fit the first securing strap around the buoyancy element and ensure the following:-
   - The strap lies properly within the element external circumferential groove.
   - The strap joint faces inwards and lies directly against the element external shell.
   - The tensioning assembly fits centrally into the recess in the external surface of the buoyancy element.

TRELLEBORG ENGINEERED SYSTEMS

Buoyancy Element Installation
4 of 8

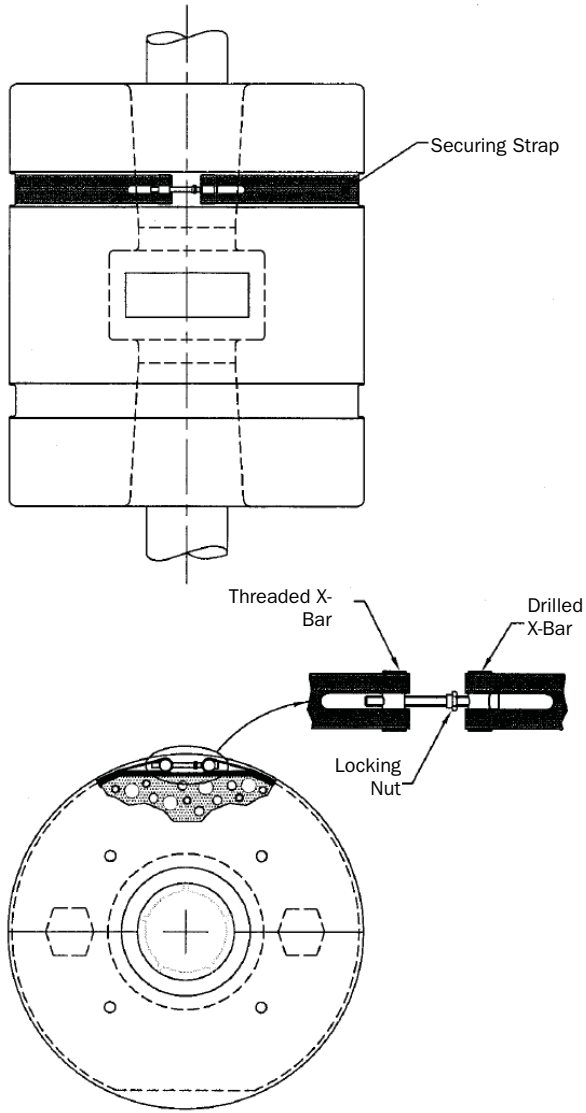

6. Engage the free end of the securing strap with the tensioning assembly cross bar. Do not tension the strap at this stage.

TRELLEBORG
ENGINEERED SYSTEMS

Buoyancy Element Installation
5 of 8

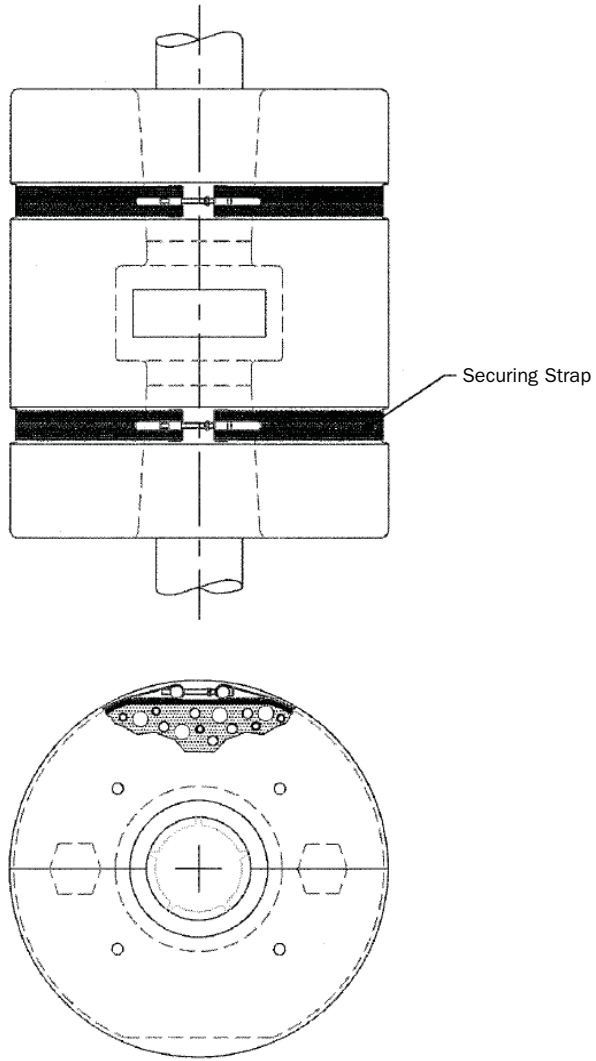

7. Repeat Steps 4 to 6 for all remaining securing straps.

TRELLEBORG
ENGINEERED SYSTEMS

Buoyancy Element Installation
6 of 8

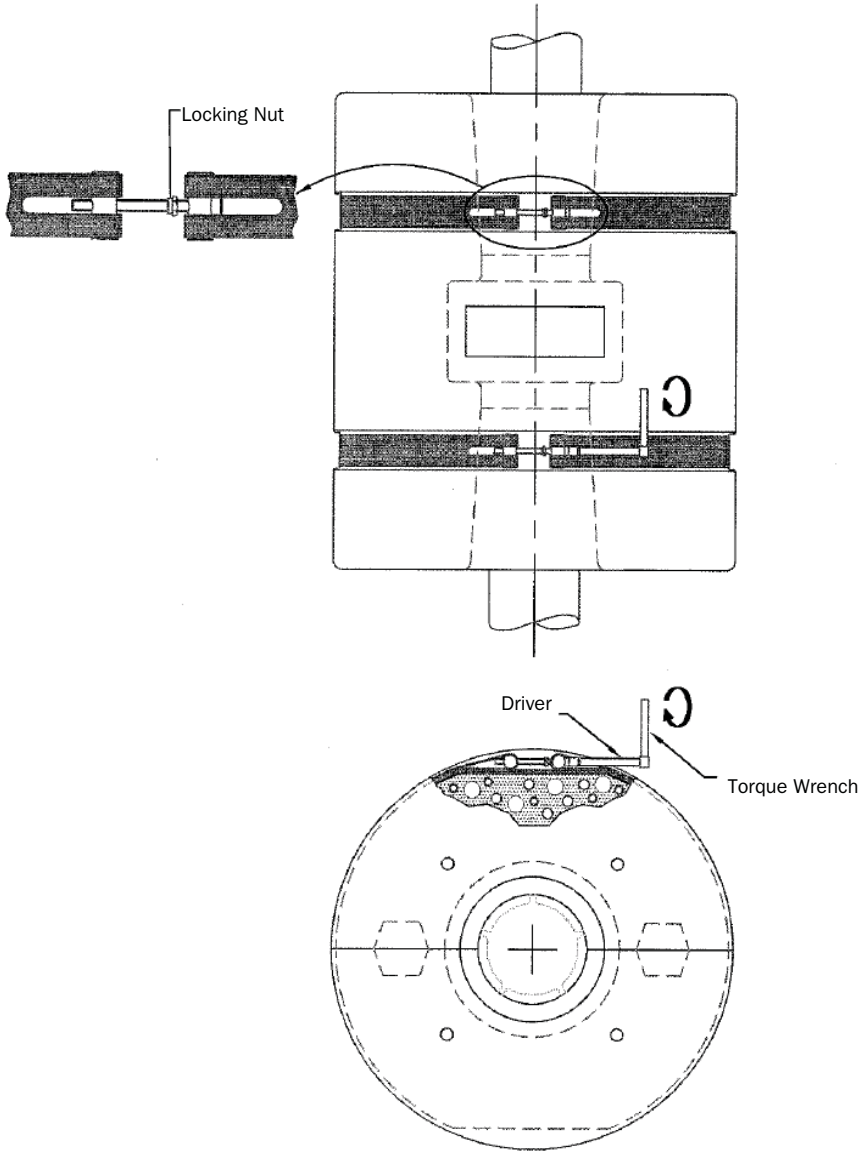

8. Apply a torque to the tensioner assembly. Gradually increase the torque in each assembly in turn rather than completing each activity in isolation.

   Tensioner Torque Requirement = 45 Nm.

TRELLEBORG
ENGINEERED SYSTEMS

Buoyancy Element Installation
7 of 8

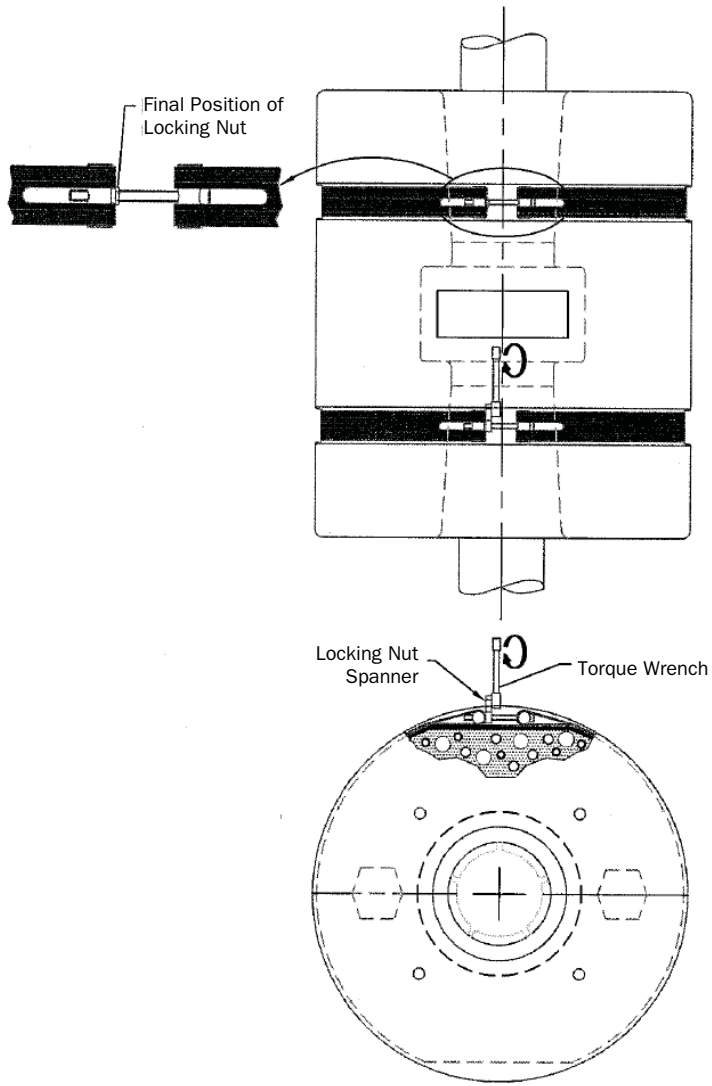

9. Run down the locking nuts on each tensioning assembly until they land on the recess provided. Ensure that the locking nut does not foul on the securing strap. Tighten the locking.

   Locknut Torque Requirement = 45Nm.

10. The installation of the buoyancy element and hence the entire buoyancy module has now been completed.

TRELLEBORG
ENGINEERED SYSTEMS

Buoyancy Element Installation
8 of 8

ITEM	QTY	DESCRIPTION	MATERIAL	DRAWING No.
1	2	ELEMENT EXTERNAL SHELL	POLYETHYLENE (LINEAR MEDIUM DENSITY)	C433540
2	2	ELEMENT CORE	SYNTACTIC FOAM	N/A
3	1	INTERNAL CLAMP G.A.	NOTED	C433538
4	2	ELEMENT SECURING STRAP	INTERNAL FIBRES TO BE ARAMID. LOW MODULUS. EXTERNAL SHEATH TO BE ETHYLENE VINYL ACETATE (E.V.A.) OR ETHYLENE ACRYLIC ACID (E.A.A.).	C433541
5	2	M12 TENSIONING ASSEMBLY	ASTM A276 S32760	C428000

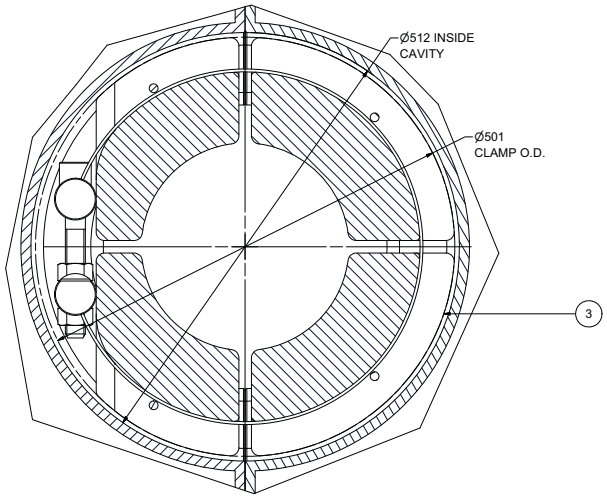

SECTION VIEW THRU ELEMENT CAVITY
SCALE (1 : 3)

NOTES:-

1. THE BUOYANCY MODULE IS SECURED TO A Ø245.1 RISER.
2. THE RISER HAS AN EXTERNAL DIAMETER OF 245.1 mm (NOMINAL) AND A MINIMUM BEND RADIUS OF 3.32 m.
3. FINAL HANDLING HOLE DIAMETER WILL BE REDUCED TO 30mm (DUE TO ADDITION OF A LINER TUBE PLACED THROUGH THE SHELL DURING FILLING PROCESS).
4. THE BUOYANCY MODULE DESIGN DEPTH IS 1524 METRES.
5. THE FINAL MODULE BUOYANCY IS 528 kg.
6. THE WEIGHT IN AIR OF THE BUOYANCY MODULE IS :

CLAMP - 30.1 kg
ELEMENT - 622.7 kg

TOTAL - 652.9 kg

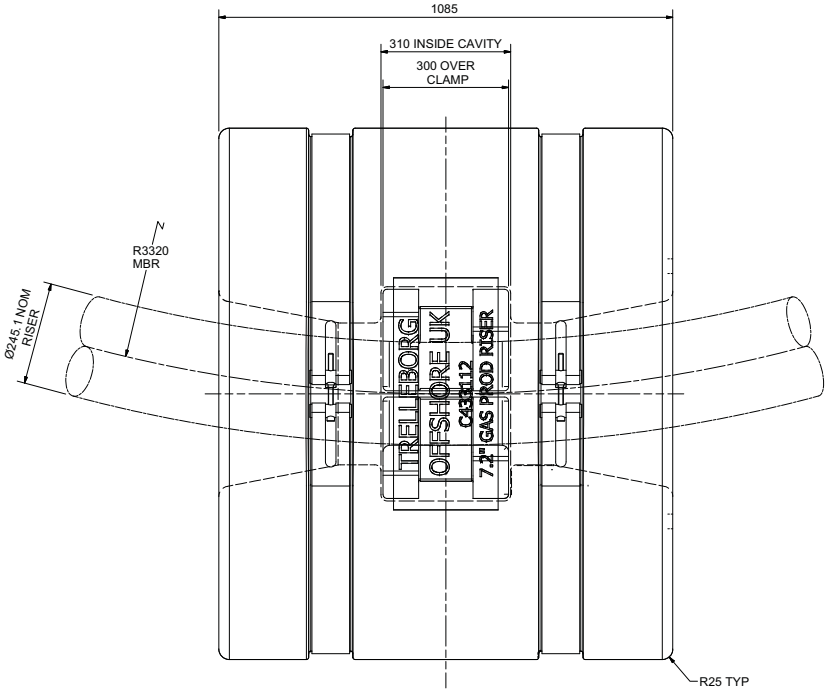

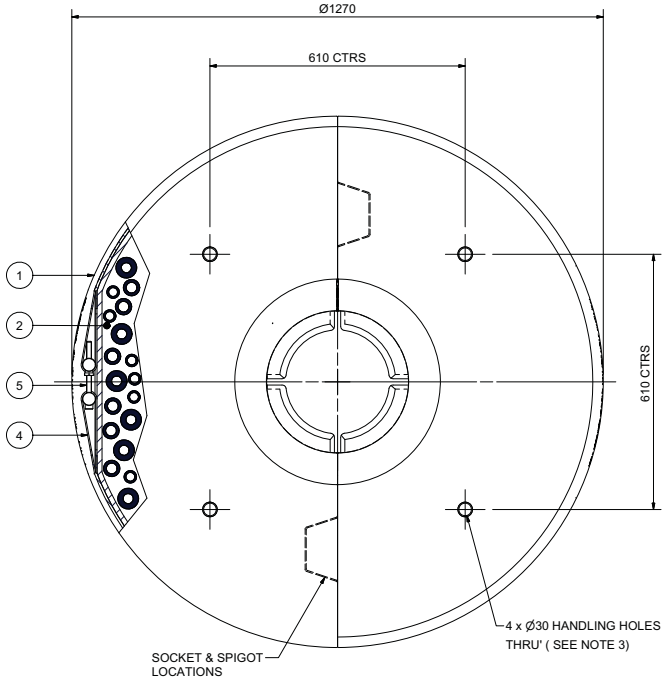

REV	DATE	DESCRIPTION	DRAWN	CHK'D	APPR'D
1	26/05/2010	FIRST ISSUE	MJ		

TRELLEBORG OFFSHORE UK LTD
STANLEY WAY, STANLEY, SKELMERSDALE, LANCASHIRE, WN8 8EA, ENGLAND.
U.K. TELEPHONE: 01695 712000
U.K. FACSIMILE: 01695 712111

CLIENT: BP
PROJECT: MACONDA CDP
TITLE: GENERAL ARRANGEMENT
Ø245.1 RISER DISTRIBUTED BUOYANCY MODULE

SCALE: 1 : 6	UNITS: mm	SHEET SIZE : A1	PROJECTION

IF IN DOUBT ASK	MODELLED BY	DRAWN BY	DRAWING STATUS
	MJ	MJ	RELEASED

PROJECT No.	DRAWING No.	REV
WO9674	C433542 SHEET 1 OF 1	01

THIS DOCUMENT CONTAINS CONFIDENTIAL INFORMATION. ALL RIGHTS (INCLUDING COPYRIGHT, CONFIDENTIAL INFORMATION , TRADE SECRETS AND DESIGN RIGHTS) ARE OWNED BY TRELLEBORG OFFSHORE UK LTD. NO USE OR DISCLOSURE IS TO BE MADE WITHOUT PRIOR WRITTEN PERMISSION OF TRELLEBORG OFFSHORE UK LTD. COPYRIGHT 2010 TRELLEBORG OFFSHORE UK LIMITED. ALL RIGHTS RESERVED.

ITEM	QTY	DESCRIPTION	MATERIAL	DRAWING No.
1	1	INTERNAL CLAMP BODY	TB760PS	C433535
2	1	INTERNAL CLAMP STRAP	TITANIUM ALLOY GRADE 5	C433536
3	2	TENSIONING SCREW	TITANIUM ALLOY GRADE 5	C433537
4	4	LOCKING NUT	TITANIUM ALLOY GRADE 5	C433537
5	4	RETAINING BAR Ø10 LENGTH = 290mm	NYLON 66	N/A
6	1	SILICONE SEALANT TO BS5889:1989	SILICON BASE	N/A

NOTES:

1. RETAINING BARS TO BE SECURED IN PLACE USING ADHESIVE. ADHESIVE TO BE SILICON BASED SEALANT IN ACCORDANCE WITH BS 5889.
2. BEFORE FINAL ASSEMBLY CLAMP BODY EXTERNAL RECESS AND CROSSBAR BEARING SURFACES ARE TO BE COATED WITH A NON-METALLIC LUBRICANT.
3. TENSIONING SCREWS ARE TO BE LUBRICATED DURING ASSEMBLY OF THE CLAMPS. LUBRICANT IS TO BE APPLIED TO BOTH FASTENER THREADS AND UNDER CAP SCREW HEADS.
4. THE WEIGHT IN AIR OF THE INTERNAL CLAMP IS 30.1 kg.
5. THE CLAMP BUOYANCY IN SEAWATER IS 3.9 kg.

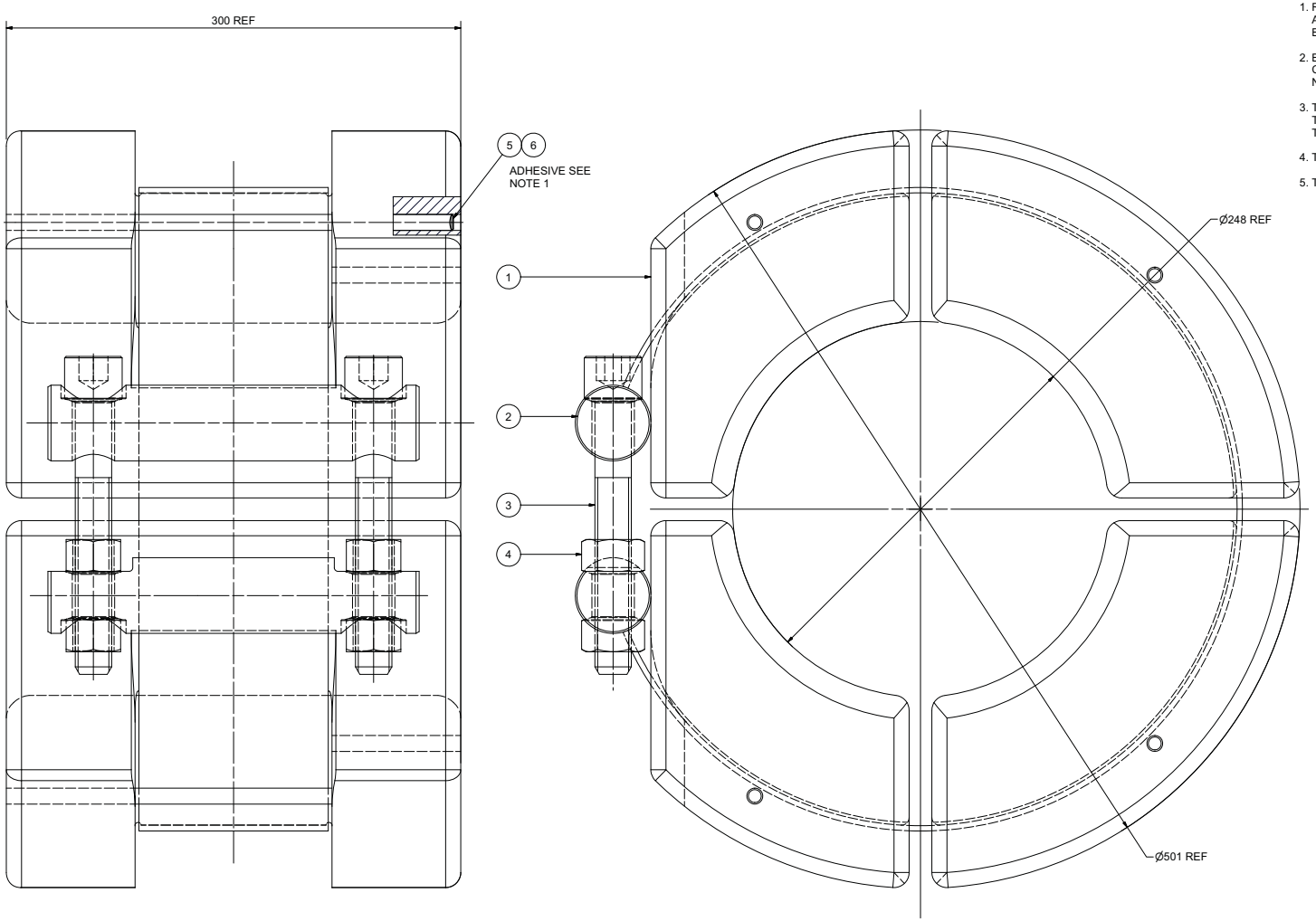

REFERENCE DRAWINGS:
Ø245.1 RISER D.B.M. GENERAL ARRANGEMENT - C433542

REV	DATE	DESCRIPTION	DRAWN	CHK'D	APPR'D
1	26/05/2010	FIRST ISSUE	MJ		

TRELLEBORG OFFSHORE UK LTD
STANLEY WAY, STANLEY, SKELMERSDALE,
LANCASHIRE, WN8 8EA, ENGLAND.
U.K. TELEPHONE: 01695 712000
U.K. FACSIMILE: 01695 712111

CLIENT: BP

PROJECT: MACONDA CDP

TITLE: INTERNAL CLAMP G.A.
Ø245.1 RISER DISTRIBUTED BUOYANCY MODULE

SCALE: 1 : 1.5	UNITS: mm	SHEET SIZE : A1	PROJECTION

IF IN DOUBT ASK	MODELLED BY	DRAWN BY	DRAWING STATUS
	MJ	MJ	RELEASED

PROJECT No.	DRAWING No.	REV
WO9674	C433538 SHEET 1 OF 1	01

THIS DOCUMENT CONTAINS CONFIDENTIAL INFORMATION. ALL RIGHTS (INCLUDING COPYRIGHT, CONFIDENTIAL INFORMATION , TRADE SECRETS AND DESIGN RIGHTS) ARE OWNED BY TRELLEBORG OFFSHORE UK LTD. NO USE OR DISCLOSURE IS TO BE MADE WITHOUT PRIOR WRITTEN PERMISSION OF TRELLEBORG OFFSHORE UK LTD. COPYRIGHT 2010 TRELLEBORG OFFSHORE UK LIMITED. ALL RIGHTS RESERVED.

DRAWING No.		REV.
C433114	SHEET 1 OF 1	02

THIS DOCUMENT CONTAINS CONFIDENTIAL INFORMATION. ALL RIGHTS (INCLUDING COPYRIGHT, CONFIDENTIAL INFORMATION , TRADE SECRETS AND DESIGN RIGHTS) ARE OWNED BY TRELLEBORG OFFSHORE UK LTD. NO USE OR DISCLOSURE IS TO BE MADE WITHOUT PRIOR WRITTEN PERMISSION OF TRELLEBORG OFFSHORE UK LTD. COPYRIGHT 2010 TRELLEBORG OFFSHORE UK LIMITED. ALL RIGHTS RESERVED.

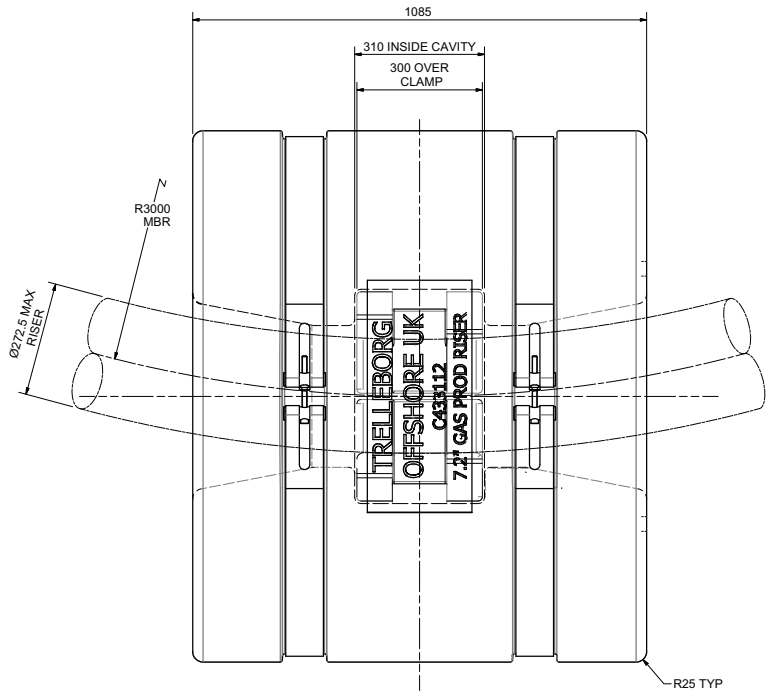

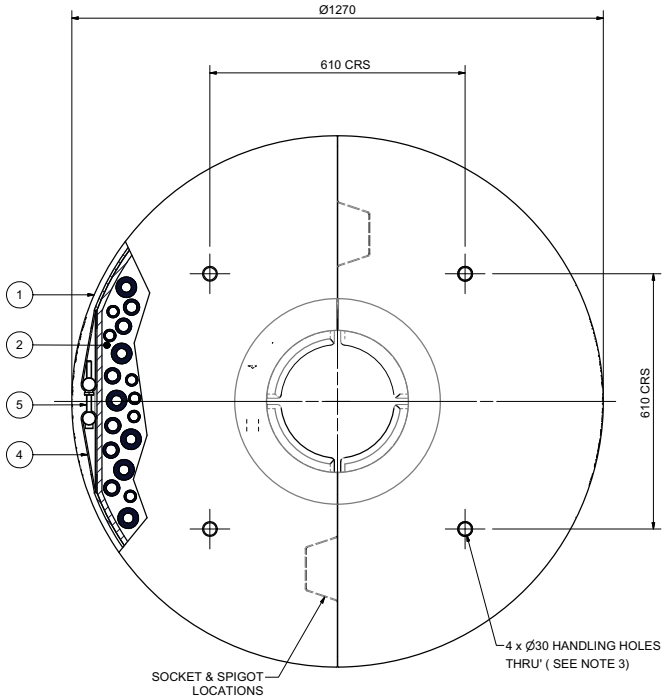

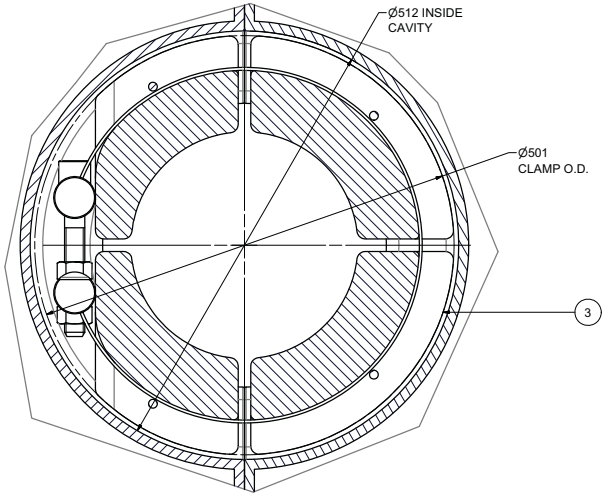

SECTION VIEW THRU ELEMENT CAVITY
SCALE (1 : 3)

ITEM	QTY	DESCRIPTION	MATERIAL
1	2	ELEMENT EXTERNAL SHELL	SEE CRG. No. C433112
2	2	ELEMENT CORE	SYNTACTIC FOAM
3	1	INTERNAL CLAMP ASSEMBLY	SEE DRG.NO. C433111
4	2	ELEMENT SECURING STRAP	SEE DRG.NO. C433113
5	2	M12 TENSIONING ASSEMBLY	SEE DRG.NO. C428000

NOTES:-

1. THE BUOYANCY MODULE IS SECURED TO A 7.2" GAS PROD RISER. (2)
2. THE RISER HAS AN EXTERNAL DIAMETER OF 268.1 mm (NOMINAL) AND A MINIMUM BEND RADIUS OF 3 m.
3. FINAL HANDLING HOLE DIAMETER WILL BE REDUCED TO 30mm (DUE TO ADDITION OF A LINER TUBE PLACED THROUGH THE SHELL DURING FILLING PROCESS).
4. THE BUOYANCY MODULE DESIGN DEPTH IS 500 METRES.
5. THE FINAL MODULE BUOYANCY IS 591.3 kg.
6. THE WEIGHT IN AIR OF THE BUOYANCY MODULE IS :

CLAMP - 28.2 kg
ELEMENT - 551.2 kg

TOTAL - 579.4 kg

REV	DATE	DESCRIPTION	DRAWN	CHK'D	APPR'D
2	26/03/2010	TITLE AND NOTE 1	LH	AF	AK
1	10/03/2010	FIRST ISSUE	DRW	AF	AK

TRELLEBORG
TRELLEBORG OFFSHORE UK LTD
STANLEY WAY, STANLEY, SKELMERSDALE,
LANCASHIRE, WN8 8EA, ENGLAND.
U.K. TELEPHONE: 01695 712000
U.K. FACSIMILE: 01695 712111

CLIENT: TECHNIP UK LTD.

PROJECT: FOINAVEN R6R

TITLE: 7.2" GP RISER DISTRIBUTED BUOYANCY MODULE GENERAL ARRANGEMENT

SCALE: 1:6	UNITS: mm	SHEET SIZE: A1	PROJECTION:

PROJECT No.	DRAWING No.	REV.
WO9387	C433114 SHEET 1 OF 1	02

IF IN DOUBT ASK!

Attachment 7: Trelleborg Friction Clamp Protection Assembly Procedure

Technip

CDP

Friction Clamp Protection

Assembly Procedure

Document No HO-W6226-EN-002, Rev 01

Confidentiality Statement

This document contains confidential information.
All rights (including copyright, confidential information, trade secrets and design rights) are owned by Trelleborg Offshore US, Inc. No use or disclosure is to be made without prior written permission of Trelleborg Offshore US, Inc. Copyright 2010 Trelleborg Offshore US, Inc. All rights reserved.

Trelleborg Offshore US, Inc.
519 N. Sam Houston Parkway E., Suite 200, Houston, TX, 77060 USA
Tel: +1.832.456.8300 Fax: +1.281.999.3451 www.trelleborg.com

Revision List

Rev No	Issue Date	Prepared		Checked		Approved	
		Name	Sign	Name	Sign	Name	Sign
01	06.17.10	V. Mansueto	VM	J. Vultaggio	JV	J. Vultaggio	JV

This document contains confidential information. All rights (including copyright, confidential information, trade secrets and design rights) are owned by Trelleborg Offshore US, Inc. No use or disclosure is to be made without prior written permission of Trelleborg Offshore US, Inc. Copyright 2010 Trelleborg Offshore US, Inc. All rights reserved.

Table of Contents

1 Introduction 4
2 Reference Drawing 5
3 General Configuration Explanation 5
4 Installation Procedure 6

This document contains confidential information. All rights (including copyright, confidential information, trade secrets and design rights) are owned by Trelleborg Offshore US, Inc. No use or disclosure is to be made without prior written permission of Trelleborg Offshore US, Inc. Copyright 2010 Trelleborg Offshore US, Inc. All rights reserved.

1 Introduction

Technip has requested Trelleborg Offshore US, Inc to supply an impact protection system for use over the 6 inch friction clamp.

This document describes the installation of impact protection onto the friction clamp.

NOTE:-

The information presented in this document provides guidelines recommended to be followed during the handling and installation of the impact protection assemblies. The final method of assembly is outside Trelleborg Offshore US, Inc.'s supply and as such the actual assembly, installation procedure and sequence adopted is the responsibility of the Installation Contractor.

This document contains confidential information. All rights (including copyright, confidential information, trade secrets and design rights) are owned by Trelleborg Offshore US, Inc. No use or disclosure is to be made without prior written permission of Trelleborg Offshore US, Inc. Copyright 2010 Trelleborg Offshore US, Inc. All rights reserved.

2 Reference Drawing

The following drawings have been generated for this project and should be referenced in addition to this procedure:

DRAWING NUMBER	Description
642010-03	Element Assembly Details
642010-01	General Arrangement

3 General Configuration Explanation

The impact protection will be shipped on pallets as two sub-assemblies. The sub-assemblies will need to be lifted from the pallet, properly oriented and assembled onto the friction clamp. The protection assemblies are designed to interface with the padeyes on the parallel flat surfaces of the friction clamp.

In addition to the impact protection sub-assemblies the following components are also provided:

i. 4 No. 1-8 UNC x 5.5 Hex Bolts
ii. 8 No. 1-8 UNC Hex Nuts

This document contains confidential information. All rights (including copyright, confidential information, trade secrets and design rights) are owned by Trelleborg Offshore US, Inc. No use or disclosure is to be made without prior written permission of Trelleborg Offshore US, Inc. Copyright 2010 Trelleborg Offshore US, Inc. All rights reserved.

4 Installation Procedure

It is recommended that the assembly be lifted by wrapping a lifting strap around the center tube and out the end underneath the cross bar at each end of the sub-assembly, see Figure 4-1.

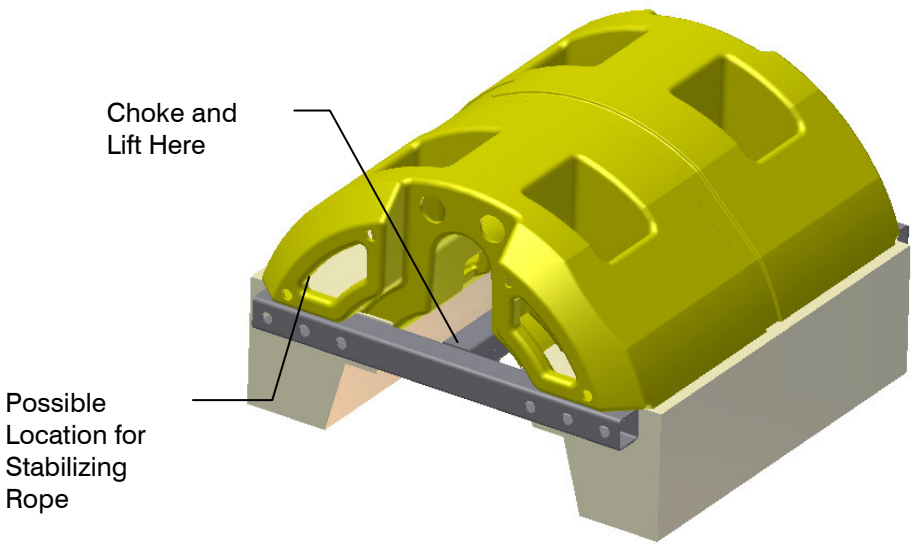

Figure 4-1 - Isometric View

Considering the center of gravity lies very near the center tube, see Figure 4-2 and Figure 4-3, and the assembly will likely try to rotate about the lifting points stabilizing ropes should be looped through the most convenient holes in the PE shell for use in orienting and stabilizing the sub-assembly during lifts and installation. At no time should the weight of the assembly be lifted by any straps or hooks connected to the PE shell; the shell material is not suitable for such loads.

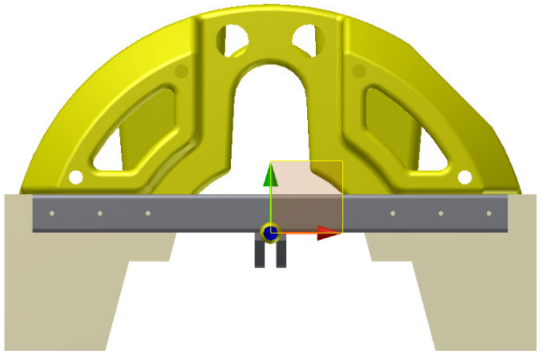

Figure 4-2 - Location of CG (End View)

This document contains confidential information. All rights (including copyright, confidential information, trade secrets and design rights) are owned by Trelleborg Offshore US, Inc. No use or disclosure is to be made without prior written permission of Trelleborg Offshore US, Inc. Copyright 2010 Trelleborg Offshore US, Inc. All rights reserved.

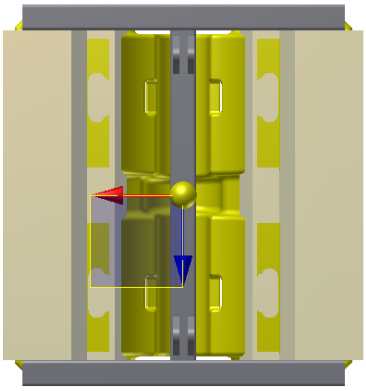

Figure 4-3 - Location of CG (Bottom View)

The first sub-assembly shall be oriented to match the orientation of one pair of padeyes on the friction clamp and presented to the clamp such that the padeyes attached to the sub-assembly straddle the padeyes on the friction clamp, see Figure 4-4.

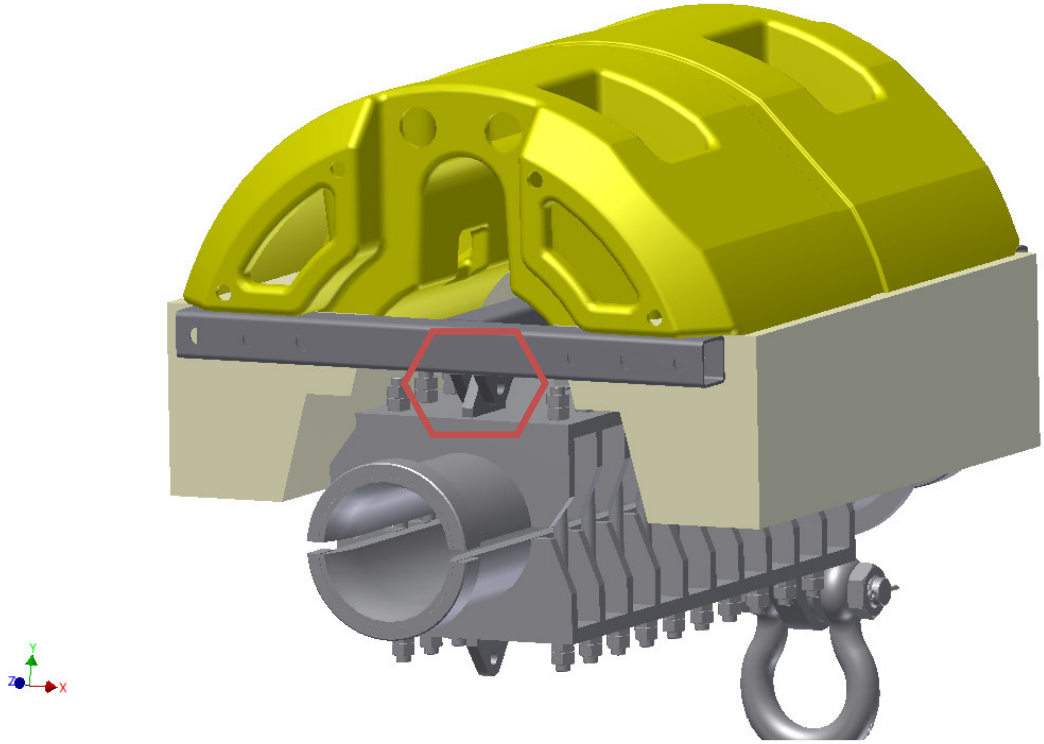

Figure 4-4 - Sub-assembly proper orientated such that padeyes interlock

This document contains confidential information. All rights (including copyright, confidential information, trade secrets and design rights) are owned by Trelleborg Offshore US, Inc. No use or disclosure is to be made without prior written permission of Trelleborg Offshore US, Inc. Copyright 2010 Trelleborg Offshore US, Inc. All rights reserved.

Pre-apply thread locking compound onto two of the supplied hex bolts. Insert one (1) hex bolt through the first set of the padeyes and install a nut on the opposite side and bring to hand tight or snug with a wrench. Insert the second hex bolt through the remaining set of padeyes and install a nut on the opposite side.

Torque the nuts to 200 – 250 ft-lbs.

Install and torque a second nut behind the already installed nuts to act as jam nuts.

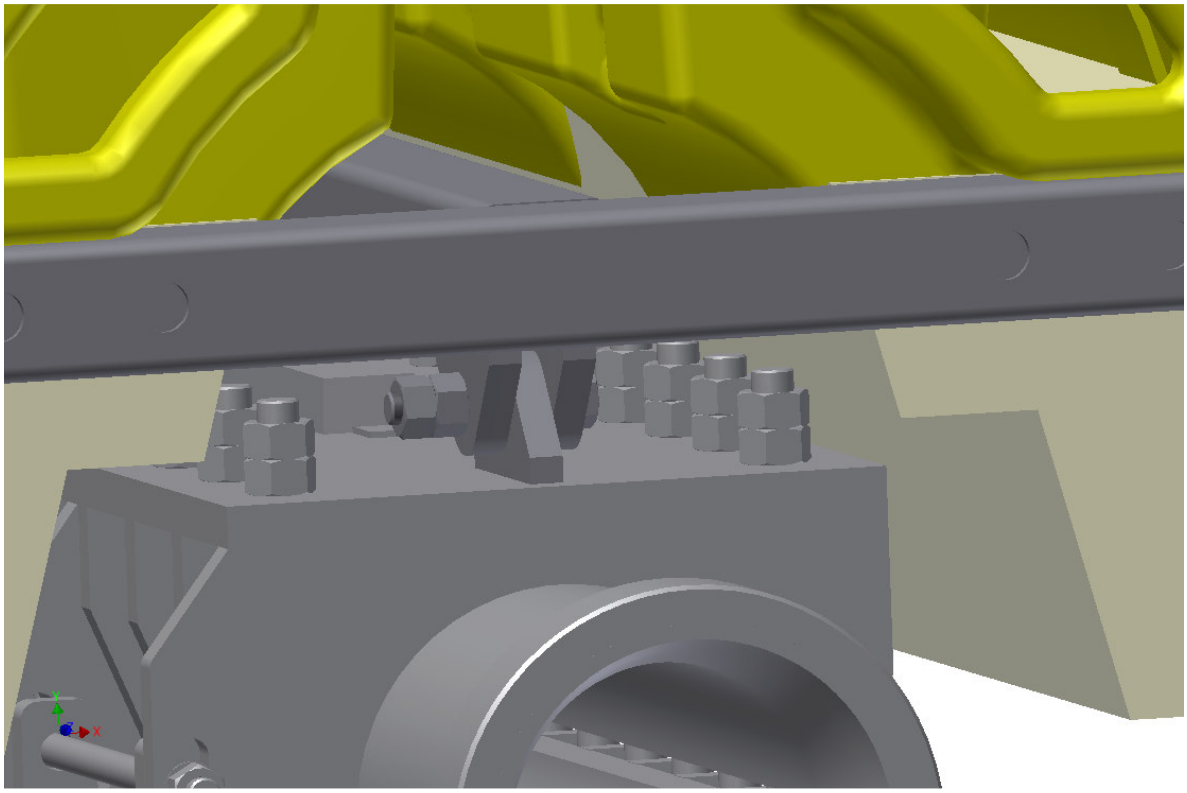

Figure 4-5 - Installed view of hex bolt, nut, and jam nut

Repeat the above procedure to install the second impact protection sub-assembly.

This completes the installation of the impact protection assembly.

This document contains confidential information. All rights (including copyright, confidential information, trade secrets and design rights) are owned by Trelleborg Offshore US, Inc. No use or disclosure is to be made without prior written permission of Trelleborg Offshore US, Inc. Copyright 2010 Trelleborg Offshore US, Inc. All rights reserved.

Attachment 8: Equipment for Permanent Storage

Equipment for Permanent Storage

Equipment/Materials Ex CDP 2

Item	Description	Supplied by	Qty Req.	Location
1	Technip 6" flowline as per data sheet 152.61433 mounted with 2 off end-fittings (fixed flanges 7" 1/16 API 10K - dwg CEM-152-61433-03) and bend stiffener	TECHNIP	1	On Storage Reel
2	8.6m Reel	HELIX/TECHNIP	1	On Storage Reel
3	45Te Pullhead, 7 1/16" 10K API FLG.	TECHNIP	2	On Storage Reel
4	8.5Te Shackle	TECHNIP	4	On Storage Reel
5	Lever Hoist/Come-Along SWL=3Te	TECHNIP	8	On Storage Reel
6	Endless Soft Sling SWL=3Te, Lg.=3m	TECHNIP	10	On Storage Reel
7	Lashing Chain Ø13 Long Links 5.3Te, 1.5m LONG	TECHNIP	2	On Storage Reel
8	Endless Soft Sling SWL=6Te, 18m LONG	TECHNIP	4	On Storage Reel
9	Shackle 4.75Te SWL	TECHNIP	4	On Storage Reel
10	Polyplank Foam Blocks (for packing of end fittings and bend stiffeners)	HELIX/Technip	lot	On Storage Reel
11	Leader Wire, Length 100ft, Ø1"	TECHNIP	1	On Storage Reel
12	Stud Bolt Ø1 1/2-8 UN x 16 3/4" LG	TECHNIP	24	On Storage Reel
13	Heavy Hex Nut Ø1 1/2-8 UN	TECHNIP	48	On Storage Reel
14	BX156 Gasket	TECHNIP	2	On Storage Reel
15	Bend Stiffener Adapter	2H	1	In container
16	Kick-off spool c/w pull head and riser clamp	2H	1	In Container
17	Uraduct Protective sleeves	TECHNIP	4	In container
18	45te Friction Clamp	Technip	1	In container
19	45te Friction Clamp Protection(Trelleborg)	TECHNIP	1	In container
20	500m rated Distributed Buoyancy Modules (Trelleborg	TECHNIP	15	In container
21	19te Hold back clamp	TECHNIP	1	In container

Equipment/Materials Ex CDP 1

Item	Description	Supplied by	Qty Req.	Location
1	Technip 6" flowline as per data sheet 152.61433 mounted with 2 off end-fittings (fixed flanges 7" 1/16 API 10K - dwg CEM-152-61433-03)	TECHNIP	1	On Storage Reel
2	9.2m Reel	HELIX/TECHNIP	1	On Storage Reel
3	45Te Pullhead, 7 1/16" 10K API FLG.	TECHNIP	1	On Storage Reel
4	8.5Te Shackle	TECHNIP	4	On Storage Reel
5	Lever Hoist/Come-Along SWL=3Te	TECHNIP	8	On Storage Reel
6	Endless Soft Sling SWL=3Te, Lg.=3m	TECHNIP	10	On Storage Reel
7	Lashing Chain Ø13 Long Links 5.3Te, 1.5m LONG	TECHNIP	2	On Storage Reel
8	Endless Soft Sling SWL=6Te, 18m LONG	TECHNIP	4	On Storage Reel
9	Shackle 4.75Te SWL	TECHNIP	4	On Storage Reel
10	Polyplank Foam Blocks (for packing of end fittings and bend stiffeners)	HELIX/Technip	lot	On Storage Reel
11	Leader Wire, Length 100ft, Ø1"	TECHNIP	1	On Storage Reel
12	Stud Bolt Ø1 1/2-8 UN x 16 3/4" LG	TECHNIP	12	On Storage Reel
13	Heavy Hex Nut Ø1 1/2-8 UN	TECHNIP	24	On Storage Reel
14	BX156 Gasket	TECHNIP	1	On Storage Reel
15	Bend Stiffener Adapter	2H	1	In container
16	Kick-off spool c/w pull head and riser clamp	2H	1	In Container
17	Uraduct Protective sleeves	TECHNIP	4	In container