GulfofMexicoSPU

bp

Document Authorization Form			
This form to be used for authorizing new, revised and obsolete documents, please indicate clearly which category applies			
Special Instructions	MC-252 Incident		
Document Details			
Document Number	2200-T2-DO-PR-4847	Revision	0
Document Title	Recovery of Wet Parked Surface Flexible Jumper (1,060-ft) Procedure		
Final Review Date	November 2010		
Reason for Issue (check as applicable)	New Document	Revised Document	Obsolete Document
	X		

Document Sign Off			
	Print Name/Title	Signature	Date
Custodian/Owner(s)			
	Stian Samuelsen **Subsea7 Lead Engineer**	P.P.	11/17/2010
	Tim Redland	T. Redland	17-Nov-2010
	Chris Pickrell		11/17/2010
	Mike Harville **Subsea Installation Lead**	Mike Harville	11/17/2010
Authorizer	Stuart Rettie **Project General Manager**		11/17/2010
Document Control Use: Logged into RST			
	PRINT Name Above	Sign Above	Date Time

MC252 Demobilization Project

Recovery of Wet Parked Surface Flexible Jumper (1,060-ft) Procedure

0	11/17/10	Issued for Use	Maria Szczepaniak
REV	**DATE**	**DOCUMENT STATUS**	**PREPARED BY**
PRINT DATE	11/17/10	**Document Number**	2200-T2-DO-PR-4847 Subsea 7 Doc No: TC1034-EP-PR-0003

Amendment Record

Rev	Date	Author	Description	Sec	Page
	10/25/2010	Tim Caws	Doc: 2200-T2-DO-PR-4819 Issued for Approval		
B1	11/05/2010	Maria Szczepaniak	Issued for Review (updated for change in vessel and work scope)		
0	11/17/2010	Maria Szczepaniak	Issued for Use		

Table of Contents

1 Introduction 4
1.1. Objective 5
2 Scope 5
2.1. HAZID 5
3 Definitions and Acronyms 5
4 Reference Documents 7
5 Communication 8
5.1. General 8
5.2. Radio Frequencies 9
6 Technical Data 10
6.1. Flexible Pipe 10
6.1.1. 6-in Flexible Jumper Main Characteristics 10
6.1.2. Lay System Squeeze Pressures 11
6.2. Flexible Length Markings 11
7 Flexible Jumper Recovery from Wet Store 12
7.1. Pre-Recovery Activities 13
7.2. Flexible Jumper Monitoring 13
7.3. Spooling and Packing Flexible Jumper onto Transportation / Storage Reel 13
8 Initial Status 14
9 Scope Execution 14
10 1,060-ft Flexible Jumper Recovery 15
10.1. Basic Description of the 1,060-ft Jumper Recovery Sequence / Methodology 15
10.2. Decision to Start Operation / 1,060-ft Jumper Recovery Check List 16
10.3. Cleaning of Recovered Equipment 16
10.4. 1,060-ft Flexible Jumper Pre-recovery Checklist 17
10.5. Procedure Steps (1,060-ft Jumper Recovery) 18
11 Contingency Procedures 24
Appendix 1: Flexible Data Sheet 25
Appendix 2: Ancillary and Installation Aids Drawings 26
Appendix 3: Operations and Rigging Drawings and Documents 28
Appendix 4: Recovery Tables and Squeeze Calculations 29
Appendix 5: 3rd Party Procedures 30
Appendix 6: HAZID Findings and Responses 31

1 Introduction

The Containment and Disposal Project (CDP) objective was to contain the spill flowing at the BOP level located at MC252-1. This was accomplished utilizing a Free Standing Riser (FSR) system composed of rigid pipe-in-pipe riser, flexible jumpers, containment and storage vessels, and an IWOCS-based/Hydrate Inhibition System (HIS).

As part of the Macondo Demobilization Project (MDP) these CDP system components will undergo de-commissioning and de-construction. This process requires that hydrocarbons/drilling mud, or base oil/drilling mud, be purged from the jumpers, flowlines, risers, and manifolds; the HIS be flushed; and of all of these components are recovered to the surface for transport, preservation, and storage.

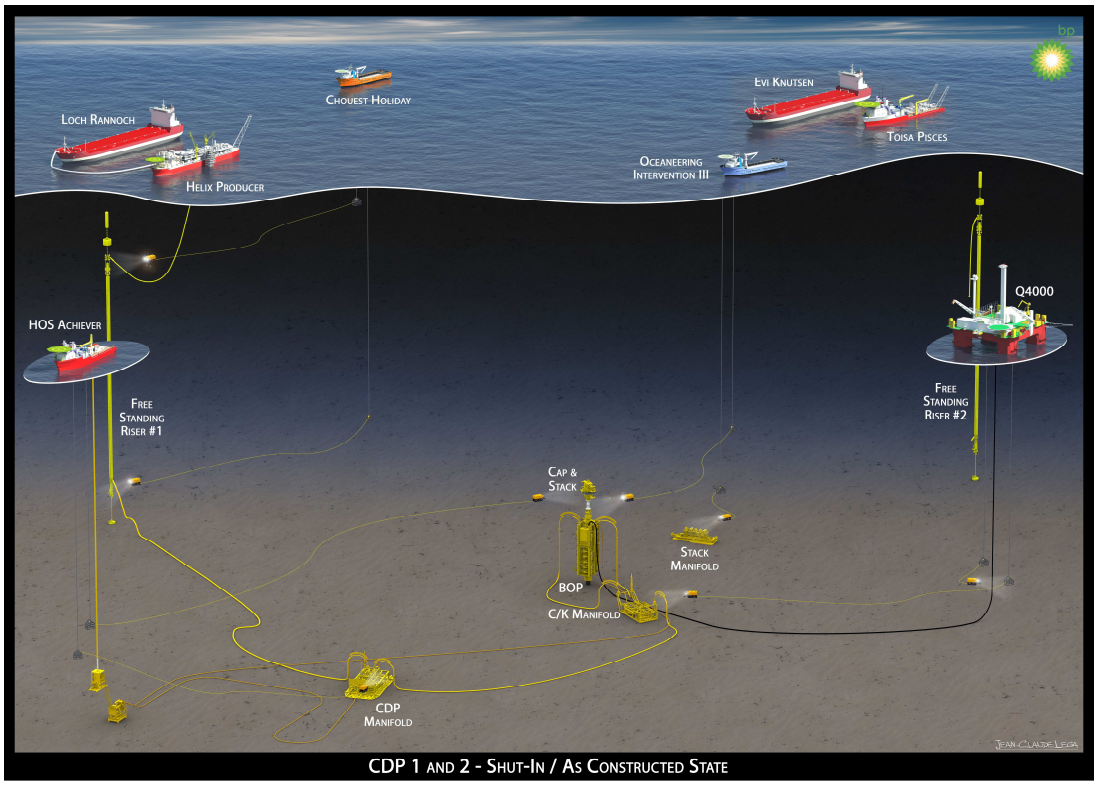

CDP 1 and 2 - Shut-In / As Constructed State

The recovery of the FSR System is part of a larger effort to deconstruct, recover and demobilize the MC 252 temporary response equipment. A holistic recovery plan (MC252-1 Temporary Installed Subsea Equipment Recovery Plan, 2200-T2-DO-PR-4746) has been developed which includes categorizing response equipment as:

- Evidence (Legal Hold).
- Temporary Kit to be Recovered (Non-Legal).
- Abandon In-Place.

The jumpers need to follow the chain of custody transfer and quarantine protocols for the recovery and demobilization of the equipment per the *procedure 2200-T2-DO-PR-4831 Equipment Demobilization Evidence Preservation and Tracking* located in Appendix 6.

The equipment will be recovered to surface and demobilized.

1.1. Objective

The objective of this document is to guide the safe recovery of the two wet parked 1,060-ft flexible jumpers previously removed from FSR1 & FSR2.

2 Scope

A technically capable construction vessel will perform the recovery and spooling of the two 1,060-ft flexible jumpers onto a designated portable reel for long term storage onshore.

This procedure has been written for Subsea 7's *Skandi Neptune* construction vessel, however a vessel of similar specifications with tensioner system and portable reeling system can be used in its place.

2.1. HAZID

A HAZID has been conducted for the recovery of the surface flexible jumpers. The outcome of the meeting is documented in Appendix 7.

3 Definitions and Acronyms

Below is a comprehensive list of abbreviations that may be used throughout the operations:

A/F	Across Flats
APIC	Activity Person in Charge
AHC	Active Heave Compensation
A&R	Abandonment and Recovery
BOP	Blowout Preventer
BR	Bend Restrictor
BS	Bend Stiffener
CDP	Containment & Disposal Project
CW	Clump Weight
DP	Dynamic Positioning
EF	End Fitting
FSR	Free Standing Riser
GA	General Arrangement

GRV	Gas Relief Valve
HIPAP	High Precision Acoustic Positioning
HP1	Helix Producer 1
ID	Internal Diameter
JHA	Job Hazard Analysis
Kgf	Kilograms Force
LBL	Long Base Line
LRA	Lower Riser Assembly
MBR	Minimum Bend Radius
MDP	Macondo Demobilization Project
MSL	Mean Sea Level
MTO	Material Take Off (Equipment List)
NB	Nominal Bore
OCM	Offshore Construction Manager
OD	Outer Diameter
PTW	Permit to Work
PE	Project Engineer
PPE	Personnel Protection Equipment
ROV	Remotely Operated Vehicle
S7	Subsea 7
SDZ	Safe Deployment/ Working Zone
SV	Supply Vessel/ Boat
SWL	Safe Working Load
TDP	Touch Down Point
Te	1,000-kg
Tef	Tonnes Force (1,000-kgf)
UHF	Ultra High Frequency
VHF	Very High Frequency (Usually refers to Ships Radio)
VPIC	Vessel Person in Charge
WD	Water Depth

4 Reference Documents

Ref#	Document Number	Title
1	2200-T2-DO-PR-4710	MC252-1 Intervention Program Surface Flexible Recovery Procedure CDP1 and CDP2
2	2200-T2-DO-PR-4794	MC252-1 Intervention Program Wet Park 2x 1,060-ft Flexible Jumpers Procedure
3	2200-T2-DO-PR-4831	MC252-1 Demobilization Evidence Preservation & Tracking Procedure

5 Communication

5.1. General

During the operations, radio communications shall be established between the vessels working onsite during the recovery of the jumpers through a single point of contact.

The BP VPIC/APIC are responsible for the recovery operation and are the only personnel that can call a start to any of the operations. However, anyone can call an all stop. After the operation has commenced, the OCM may delegate to the Shift Supervisor to hold back the offshore operation.

During all communications it is important that well defined instructions are given, which avoid any confusion between the vessel and the plant. Key personnel involved with communications shall be thoroughly briefed and instructed regarding their role and responsibility.

The commands and response used during the communication should be loud and clear. Every command shall be verified by receiving operator, while or before the command is executed. Radio communication systems shall be frequently monitored, tested and supervised to ensure that communications are properly functioning at all times. An adequate supply of spare batteries must be available at all times.

To stop the recovery operation there are two commands that can be used by any operator. They are “ALL STOP” and “EMERGENCY STOP”. The procedure for each command is as follows:

- The command “ALL STOP” followed by identification of control station position shall halt the operation in a controlled and synchronized manner at all work stations. All personnel involved at the different control stations may issue the “ALL STOP” command.
- The command “EMERGENCY STOP” followed by identification of control station position shall stop all equipment as quickly as possible.
- Communications will be checked before starting operations. The operations will be stopped in case of significant deterioration, or complete loss of communications, until they are restored.

ROV video will be displayed on the vessel bridge. Operations will be halted if the ROV display deteriorates or is lost, as it is critical to installation activities.

5.2. Radio Frequencies

Vessel-to-vessel communications will be by VHF.

Intra-vessel communications will be by hard wired connections or VHF.

Channels will be selected on site and noted in the table below to be posted at each vessel's bridge. Vessels onsite are to be added in blank rows.

Function	Band	Channel/Frequency	Telephone Number
Skandi Neptune	VHF		+47 51 40 62 96 +870 325 814 210
DD3	VHF	16	713-336-8229
	VHF		
	VHF		

6 Technical Data

Refer to the following GA drawings in Appendix 2 for overview of both the flexible jumpers: GS017455-000-DW-5280-0004 – (FSR1 GA with Helix Producer) and GS017698-000-DW-5280-0001 – (FSR2 GA with Toisa Pisces).

6.1. Flexible Pipe

The structure number for the 6-in flexible pipe is 152.61433 Rev 1 (both the 1,060-ft surface jumpers). See Appendix 1 for the data sheet.

6.1.1. *6-in Flexible Jumper Main Characteristics*

The below two tables highlight the main characteristics of the Flexible Pipe.

Table 6-1: Flexible Jumper Overview

Flexible	Type	Initiate At	Terminate At	Est. Length	Reel	Approx Water Depth
6-in (FSR2 - Toisa Pisces)	Dynamic	FSR Upper Hub	6-in Flexible connection on Toisa Pisces	1,060-ft	9.2-m Portable	4,984-ft-4,988-ft
6-in (FSR1 - HP1)	Dynamic	FSR Upper Hub	6-in Flexible connection on HP1	1,060-ft	9.2-m Portable	4,984-ft-4,988-ft

Table 6-2: Flexible Jumper Data

Inner Diameter (in)	Outer Diameter (in)	Length (ft)	Weight (lb/ft)	Flexible Weight (kip)	Minimum Bend Radius (ft)
6.00 (1)	9.65	1,060	77.90-in air empty 91.57-in air full 45.40-in water empty 59.08-in water full	82.5 97.0 48.1 62.5	5.46 storage 8.19 install

*** Weight of flexible pipe only.**

Note: The above total weights are for the bare flexible only and do not include weights for end fittings ,bend stiffeners, vertebrae, DBM's, Uraduct, friction clamps and flooding head.

- **FSR1 Upper Flexible Jumper Estimated total weight in water = 66.5-kips (30.2-te).**
- **FSR 2 Upper Flexible Jumper Estimated total weight in water = 55.5-kips (25.3-te).**
- **Technical Data Sheets: [1] 152.61433 Rev 0.**

6.1.2. *Lay System Squeeze Pressures*

The following table lists the tensioner system squeeze pressures for the 4-track tensioner in the Vertical Lay System (VLS). These values are the system pressures to be applied to the flexible during all recovery activities. These values will not exceed the maximum allowable radial load on the flexible in accordance with the manufacturer. Calculations are shown in Appendix 4. The surface and seafloor flexible will use the same squeeze on the VLS system.

Table 6-3: Lay System Flexible Squeeze Parameters

Flexible	Max Dynamic Load	Internal Friction Coefficient	Tensioner Needed	Number of Tensioner Tracks	Length of Tensioner	Max Expected Squeeze	Max Allowable Squeeze
All 9.65 OD Flexibles	50 Te	0.1	1	4	3.8 m	450 kN/m/track	1270 kN/m/track

6.2. Flexible Length Markings

There are neither relative length markings nor attachment installation markings on the 6-in flexible outer sheathing. The outer sheath of the flexible is yellow. The only length markings on the flexible are in small numerals from the manufacturing process and have no correlation to the actual length of flexible being installed.

7 Flexible Jumper Recovery from Wet Store

This procedure details the steps / activities involved in the recovery from wet store of the upper 6-in flexible jumpers utilizing a construction vessel with lay system.

The flexible jumpers are shorter than the water depth.

In the case of the FSR 2 upper flexible jumper (*Toisa Pisces*), one end of the flexible is fitted with a bend stiffener adapter piece (kick-off spool) used to connect to the FSR Upper Riser Assembly. The other end of the flexible is fitted with a temporary flooding and testing pulling head (Appaloosa Head). This flexible will be vented to seawater prior to wet storage.

In the case of FSR 1 upper flexible jumper (*HP1*), one end of the flexible is fitted with a bend stiffener adapter piece (kick-off spool) used to connect to the FSR Upper Riser Assembly. The other end of the flexible is fitted with a standard pull head which was fitted on the *HP1* prior to release.

The upper 6-in dynamic flexible jumpers are fitted with the following attachments used for abandonment / recovery of the flexible jumpers from the host vessel in the event of emergency disconnect. These attachments will remain attached to the flexible during wet storage.

Note: Both flexibles will have a 5 Te chain clump weight attached to the 2nd end that will be removed mid-water prior to recovery to deck.

FSR1 Upper Flexible Jumper (*HP1*)

- Bend stiffener adapter with kick-off spool, pulling head (FSR End)
- Bend stiffener
- Uraduct pipe protection at securing clamp locations (4 off)
- Pull head

FSR2 Upper Flexible Jumper (*Toisa Pisces*)

- Bend stiffener adapter with kick-off spool, pulling head (FSR End)
- Bend stiffener
- Uraduct pipe protection at securing clamp locations (4 off)
- Discrete buoyancy modules (15 off) Appaloosa pull head end
- 45-Te capacity friction clamp
- 45-Te Friction Clamp Protection
- Vertebrae
- Uraduct pipe protection to protect pipe on chute
- 19-Te SWL handling collar mounted to end fitting
- Flooding and testing Pull head

While it is desirable to have two (2) ROVs to perform the recovery ops, only one (1) ROV is required to perform all the installation activities detailed in this procedure. The second ROV will be utilized at discretion of the OCM / BP APIC. This shall apply to all works detailed in this procedure.

Site specific weather reports will be obtained onboard the *Skandi Neptune*, multiple times per day.

7.1. Pre-Recovery Activities

The following operations will occur prior to initiating any flexible recovery activities:

- Wet Storage of the Upper Surface Flexibles;
- Full survey of the flexibles on the sea bed prior to recovery;
- Confirm a favorable weather window exists to proceed with the estimated duration of the flexible recovery works. Re-evaluate, as needed, if forecasts or onsite weather conditions change. The Vessel Master, Superintendent and BP Company representative will mutually agree that a weather window exists.
- Limiting Environmental Criteria for recovering the flexibles shall be

  Significant Wave (Hs): 2.5 m (8 ft), Wind: 30 knots

7.2. Flexible Jumper Monitoring

The recovery operation will be performed using the set of lay tables in Appendix 4.

Appendix 4 includes lay tables for a water-filled flexible. In the case of both flexible jumpers, the lines will be flooded but free to vent.

In the recovery phase, the position of the flexible 2nd end on the seabed and the tension in the recovery winch wire will be continuously monitored and cross checked against the lay tables to ensure the flexible MBR is not exceeded during recovery.

7.3. Spooling and Packing Flexible Jumper onto Transportation / Storage Reel

For recovery of the surface flexible jumpers, a 92-44-50 reel has been provided. The dimensions for this reel are shown below:

Reel	Exterior Ø (m)	Drum Ø (m)	Drum Width (m)	Total Width (m)	Empty Weight (Te)	Capacity (Te)
92-44-50	9.2	4.4	5.0	5.89	38.3	235

Both 1,060-ft Upper Jumpers shall be recovered and packed on the 92 reel along with the 1,200-ft seafloor jumper. The procedures for packing both jumpers on the reel are described in section 10.5 below. The 92 reel will be fitted with partitioning to separate the 3 flexible lines. The 92 reel flexible shall be recovered prior to the 1350-ft seafloor flexible.

8 Initial Status

The 1,060-ft flexible jumpers will be wet stored on the seabed adjacent to the respective risers in pre-surveyed wet store locations (MDP-30-AR-LD-0002). The exact location of the flexibles will be provided by the offshore survey representatives prior to carrying out this procedure.

The internal bore of the jumpers shall have been flushed clean and gas pressure relieved from the annulus through GRV up to the ambient pressure in the current environment. Care must be taken during recovery to relieve any built up gas pressure in the annulus during recovery.

The jumpers will have rigging on each end as indicated by the rigging drawings:

CDP-38-HI-DG-0015, MDP-38-HI-DG-0045 and MDP-38-HI-DG-0077

located in Appendix II.

9 Scope Execution

Before any operation starts, a kick-off meeting shall be performed with representatives from the involved entities. This includes as a minimum client representative(s), OCM, TPUSA project team and the relevant crew of the vessel.

The kick-off meeting shall go through the entire operation and will focus on establishing good lines of communication and coordination. Shift handover meetings will be performed during shift handovers.

All personnel involved in the operations shall be given a safety briefing. The briefing shall go through the relevant operations with focus on briefing the personnel about the several parallel activities going on during the operation. It shall also be ensured that all personnel use adequate safety equipment.

10 1,060-ft Flexible Jumper Recovery

10.1. Basic Description of the 1,060-ft Jumper Recovery Sequence / Methodology

- Full survey of the wet stored flexible to ensure it is in as-left condition;
- Pull head end of flexible located and rigging end identified;
- Kick off spool end of flexible located and rigging end identified with rigging free of seabed;
- Confirm if the clump weight has been repositioned from the pull head end of the flexible to the kick-off spool end of the procedure.
- Vessel moves into position above the first end (pull head end) for recovery;
- Crane wire connected to first end for recovery of the flexible;
- Raise the 1st end of the flexible in accordance to the recovery tables. ROV to monitor the bend radius as the flexible lifts off the seabed;
- Slew crane in line with the tensioner system;
- The crane shall bring the 1st end through the open tensioners, over the VLS and to the deck (VLS tugger to assist 1st end over aligner).
- The Appaloosa pulling head will then be removed on-deck if fitted (applies only to FSR2)
- A standard vented pull-head (if not already installed) is to be installed and connected to the crane and tugger wire;
- Haul-in on pipe using tensioners and guide the 1st end onto the reel with the assistance of the tugger wire and crane;
- Crane line will be used with the tailing wire on the reel to assist in initiating the re-spooling of the flexible pipe. Crane to be disconnected when reel has custody of the load;
- Haul in on the tensioner and the reel to recover the flexible;
- Remove the buoyancy modules, uraduct, 45-Te friction clamp and vertebrae from the flexible at the work platform before the tensioner;
- The 2nd end shall be allowed to hang from the tensioner to relieve torsional stress;
- Continue to haul-in on flexible;
- Transfer the clump weight from the flexible to the crane and recover to deck;
- Pay in on flexible until 2nd end arrives into VLS workstation
- Attach VLS tugger to webbing sling on flexible in front of kickoff spool
- Attach main crane to 2nd end
- Open tensioners and use main crane to lift flexible out of tensioners and over VLS

- Land 2nd end on deck and disconnect the VLS winch
- Disconnect the kick-off spool and associated equipment; Attach standard pull-head at 2nd end;
- Spool remaining pipe onto reel;
- When possible the 2nd end will be secured to the portable reel

10.2. Decision to Start Operation / 1,060-ft Jumper Recovery Check List

Decision to start is subject to completion of the checklist below, weather criteria Section 7.1) and Client agreement.

In any case, offshore works should not start unless a suitable weather window is forecast to cover the period of recovery.

The below Check List shall be completed and signed prior to commencing recovery operations.

10.3. Cleaning of Recovered Equipment

All components recovered to deck are required to be rinsed in fresh water. Any exposed flange sealing faces must be washed down with fresh water and a thin film of silicone based lubricant prior to re-installing the temporary pulling heads. This rinsing will apply specifically to:

- FSR2 First End Fitting (Upon removal of Appaloosa Pulling Head) [FSR2];
- Appaloosa Flooding Pull Head;
- Kick-Off Spools and Bend Stiffener Adaptors;
- FSR2 45-Te Friction Clamp;
- FSR2 Vertebrae and Vertebrae Adaptor;
- FSR1 & FSR2 Second End Fitting (Upon removal of Kick-off spools);
- Bend Stiffeners (whilst still on the flexible jumper).

10.4. 1,060-ft Flexible Jumper Pre-recovery Checklist

Description	Initial
Vessel requirements have been satisfied: • DP trials and positioning checks and calibrations completed. • Weather window acceptable (24-hours within environmental criteria – Section 7.1). • Safe working zone identified and vessel positioned within.	
Communications check performed with deck and ROVs.	
Communications check performed and readiness confirmed with all vessels at site, as required by SIMOPS.	
Communication check with Houston Team specifically Onshore Team Lead for priority and Go/No-Go.	
Latest as-built lay route drawing entered into survey computer.	
Tool box talk with offshore personnel completed.	
Pre-recovery survey of the jumper has been completed to ensure no obstacles cross the jumper and rigging is in an acceptable condition.	
Recovery reel and associated packing arrangement has been received and reviewed. The reel has been inspected to ensure free from any defects (e.g. sharp edges, weld scars, etc.) that may damage flexible.	
All rigging has been received for reel packing arrangement and recovery operations.	
Sufficient, empty half height containers are available for backloading recovered equipment. Minimum 3 ea. 6 x 20-ft open containers are recommended.	
Seawater pressurized hose is available at work station for wash down of pipe as it comes on board.	
Confirm if the clump weight has been moved from the pulling head end of the flexible to the kick-off spool end.	
Confirm a JSEA / TRA has been completed for the following operations for all personnel involved.	

10.5. Procedure Steps (1,060-ft Jumper Recovery)

The following steps outline the flexible jumper recovery tasks:

- Installation aids and ancillary drawings are in Appendix 2.
- Story boards and rigging drawings are in Appendix 3.
- Recovery Tables are in Appendix 4.

Note: This procedure has been written using the Skandi Neptune Construction Vessel.

Notification		
1.	Give notification to Houston Field Simops Director and DD3 6 hours prior ROV deployment. (If required)	
2.	Confirm that all vessels at site (as required) are in an acceptable orientation and operations state.	

Seabed Recovery		
1.	Complete full survey of wet stored flexible to ensure it is in as-left position. Confirm pull head end and kick off spool rigging are located and as in as-left drawings. Confirm that the clump weight is at the 2nd end (kick off spool end) of the flexible.	Appendix 2 CDP-38-HI-DG-0045 (FSR1) CDP-38-HI-DG-0015 (FSR2) MDP-38-HI-DG-0077 (FSR1 & FSR2)
2.	Rig main crane wire per rigging drawing for 1st end pick up of the flexible.	Appendix 3 TC1034-HED-6003 Sheet 1 TC1034-HED-4001
3.	Skandi Neptune to move to location above 1st end pull head and set-up on DP (if not already). Lower crane wire above rigging for connection. **Note: Sea-conditions to be monitored closely by BP rep, vessel OCM and PE for suitability of connection of crane wire for recovery.**	Appendix 3 TC1034-HED-6003 Sheet 1
4.	ROV to confirm that both vent valves on the flooding head are in the OPEN position (HAZID action ref. 4714-6).	
5.	ROV to connect hook from crane to shorter synthetic grommet on pullhead. **Note: Per checklist in section 10.4 verify that any existing rigging being used (per rigging drawing) has been inspected by ROV.**	Appendix 3 TC1034-HED-6003 Sheet 1 CDP-38-HI-DG-0015

Seabed Recovery		
6.	Crane to commence hauling in to raise the flexible from the sea bed in addition to vessel moves as per the recovery table analysis, with continuous ROV observation.	Appendix 4 Recovery Table Appendix 3 TC1034-HED-6003 Sheet 2
7.	In conformance with the recovery tables and analysis, the 1st end on the crane shall be recovered to surface **Note: Hold Point required ensuring GRV has time to discharge pressure in annulus. ROV to verify this by observing GRV on end fitting that no gas bubbles are being released. When the 1st end is just below the surface, ensure a 15-minute hold period is carried to relieve any gas build-up in the flexible annulus.** **(HAZID action ref. 4714-1**)	Appendix 3 TC1034-HED-6003 Sheet 2 Appendix 4 Recovery Table

Jumper Recovery to Deck and Spooling onto Portable Reel		
1.	Slew crane in line with the tensioner system and workstation. Bring the pull-head into the VLS work station. **Note: As flexible is being recovered, check for sheen on surface of water. (S7 HIRA ref. 3.2.8.1) If there is a suspicion of a leak from the flexible, additional PPE may need to be worn in the workstation. Spill kits will be available.**	Appendix 3 TC1034-HED-6003 Sheet 3
2.	Prior to uraduct removal, have VLS tugger wire routed over the system and prepared in the work station**.**	
3.	**Raise the flexible jumper with the main crane until the uraduct protection is accessible from the work platform.**	Appendix 3 TC1034-HED-6003 Sheet 4
4.	Riggers from the *Skandi Neptune* will cut bands and remove Uraduct protection from around the flexible and store half shells in half height container on the deck. **Note:** Uraduct protection can be handled manually by the riggers for removal out of the VLS workstation. **Important:** Wash down the flexible and remove any float ropes, tape, etc. While the flexible is going through the workstation, it shall be inspected to ensure all miscellaneous items are removed and to note any points of damage (S7 HIRA ref 3.2.7.1) **Note any points of damage with photos and approximate location on flexible (HAZID action ref. 4714-4)**	Appendix 3 TC1034-HED-6003 Sheet 4 Appendix 5 Uraduct Protection Procedure

Jumper Recovery to Deck and Spooling onto Portable Reel		
5.	While removing the Uraduct protection, attach a Webbing sling approximately 2-5 m behind the pull head / flooding head. Attach the VLS tugger wire to the Webbing sling. **Note:** The webbing sling will not be used to support the load of the jumper.	Appendix 3 TC1034-HED-6003 Sheet 4
6.	Using crane lift flexible into open tensioners. When 1st end pull head is above tensioners, close tensioners.	Table 6.3
7.	Only Applies to FSR2 Continue Pull-in of flexible until 45-Te friction clamp vertebrae are accessible.	Appendix 3 TC1034-HED-6003 Sheet 4
8.	Only Applies to FSR2 Riggers in work station to remove vertebrae from flexible above and below 45-Te friction clamp using hand tools (torque wrench). Breakout torque value = 50-ft-lbs. Davits available in work station for lifting and moving of vertebrae. Each vertebrate segment weight = 81.8 lbs (37.1 kg)	Appendix 2 CDP-39-GE-DG-0072 CDP-39-GE-DG-0073 Appendix 3 TC1034-HED-6003 Sheet 4
9.	Only Applies to FSR2 Remove vertebrae adapter from friction clamp. Use chain hoists where necessary and avoid manual handling.	Appendix 2 CDP-39-GE-DG-0078 Appendix 3 TC1034-HED-6003 Sheet 4
10.	Only Applies to FSR2 Riggers to remove 45-Te friction clamp protection and 45-Te friction clamp from 6-in flexible in work station using main crane. Davits are also available in the workstation. Note: Weight of Friction Clamp = approx 1000 lbs/half (450 kg/half)	Appendix 2 CDP-39-GE-DG-0072 CDP-39-GE-DG-0073 Appendix 3 TC1034-HED-6003 Sheet 4 Appendix 5 Trelleborg Friction Clamp Protection Procedure
11.	Using the main crane and VLS tugger to support the flooding/pulling head, transfer the pull head down to the aft deck. Secure with local rigging (Minimum SWL 3 Te) **Caution: Confirm that suction is heard on flooding head vent cap on FSR2. (S7 HIRA ref. 3.2.8.1). If suction cannot be heard, check that vent is open. If vent is open, and no suction is heard, take caution when undoing bolts to remove the flooding head.**	Appendix 3 TC1034-HED-6003 Sheet 5
12.	Only Applies to FSR2 Riggers to remove the "Appaloosa" flooding head from the flexible jumper using flogging spanners to unfasten the studbolts. **Note: Flooding head previously installed using Integra hydraulic bolt tensioners set to 11,000-psi.**	Appendix 3 TC1034-HED-6003 Sheet 5 CDP-39-GE-DG-0059

Jumper Recovery to Deck and Spooling onto Portable Reel		
13.	Only Applies to FSR2 Replace the Appaloosa flooding head with standard 7 1/16-in API flange pulling head and shackle suitable for spooling flexible onto storage reel. Tighten bolts to 1,278 ft-lbs. Ensure the pull-head is fitted with vent holes and ensure all the plugs in the pull head are removed prior to further spooling. Secure head to flange with 16-in long 1.5-in diameter studbolts. **Important:** - Ensure the end fitting and flooding head is washed down with freshwater and the sealing face is greased prior to fit of standard pullhead. (HAZID action ref. 4714-5) - If a vented pulling head is not available, use a standard non-vented pulling head and use a gasket with a notch cut out to permit venting of the flexible.	Appendix 3 TC1034-HED-6003 Sheet 5 CDP-39-GE-DG-0085
14.	Only Applies to FSR2 Remove the 19 Te Handling Clamp. **Note:** Weight of Collar Assembly = 77 lbs (35 kg)	Appendix 2 CDP-39-GE-DG-0086
15.	Attach packing rigging as per drawing.	MDP-38-HI-DG-0051
16.	Connect main crane to pull head rigging and connect tugger wire from RDS to 55-Te Crosby G2140 shackle attached to flexible jumper pulling head.	Appendix 3 TC1034-HED-6003 Sheet 6 MDP-38-HI-DG-0051
17.	Start to pay in on flexible to spool flexible onto 92 storage reel. **Note: Total length of time for pull in operations shall be at least one hour, with a 15-minute hold period just below the surface for the second end fitting to relieve any gas build-up in the flexible annulus.** (HAZID action ref. 4714-8)	Appendix 3 TC1034-HED-6003 Sheet 6 Table 6.3
18.	Secure the 1st end pull head to the 92 reel by choking the 2 off 3-m slings at the end of the pull head rigging to the reel frame. The attachment should be made to the reel and not the separation. **Note: Rigging used to secure the pull head to the reel is to be checked daily to ensure still intact and secure. (S7 HIRA ref. 3.2.9.1)**	Appendix 3 MDP-38-HI-DG-0051
19.	Continue to pay-in on the flexible both on the reel drive and the VLS tensioners and cut bands to remove Uraduct sections from flexible as they arrive at the aft work station.	Appendix 3 TC1034-HED-6003 Sheet 6
20.	Once main crane is free, rig with 11 Te ROV hook and deploy to depth to recover 5 Te clump weight to deck.	

Jumper Recovery to Deck and Spooling onto Portable Reel		
21.	Only Applies to FSR2 Continue to haul in on flexible jumper to spool flexible onto storage reel until 1st Distributed Buoyancy Module arrives at the work platform. (approximately 125 ft (38 m) behind the 1st end.)	Appendix 3 MDP-38-HI-DG-0076-05
22.	Only Applies to FSR2 Remove outer buoyancy and inner clamp from flexible and store buoyancy module and clamp in half height container on deck. Repeat buoyancy module removal for the remaining 14 off buoyancy modules. The buoyancy modules can be reassembled to save storage space. This will likely require 20% additional spare bolts. **Note: Approximate buoyancy module assembly weight = 650 kg. Due to ingress of water, this weight could be doubled.** **Important: The core of the buoyancy module will have imploded due to exceeding rated depth. Core will be liquefied but inert. Care should be taken to not spill over deck. See photo below for how buoyancy modules look like subsea:** **Buoyancy modules should be marked in red paint to prevent any future use (HAZID action ref. 4714-2).**	Appendix 5 DBM Installation Procedure
23.	Pull-in flexible until Kick-off spool head arrives in the VLS work station. **Note: During recovery, the flexible will be free flooding. Drain holes in the end of the flexible kick-off spool pull head should allow water to drain from inside flexible during recovery.** **Note: Prior to arrival of 2nd end into work station, route VLS tugger wire underneath VLS to provide holdback**	Appendix 3 TC1034-HED-6003 Sheet 7

Jumper Recovery to Deck and Spooling onto Portable Reel		
24.	Choke Webbing sling in front of bend stiffener. Attach VLS tugger to Webbing sling.	Appendix 3 TC1034-HED-6003 Sheet 7
25.	Rig main crane to kick-off spool lift rigging.	Appendix 3 TC1034-HED-6003 Sheet 7 TC1034-HED-4003
26.	Open VLS tensioners and lift flexible out of tensioners and over the lay chute with the main crane using the tugger for holdback.	Appendix 3 TC1034-HED-6003 Sheet 7
27.	Lower 2nd end down using the crane around the deck quadrant and down to deck level and support end of flexible and bend stiffener on temporary polyplank support blocks.	Appendix 3 TC1034-HED-6003 Sheet 8
28.	Remove kick-off spool and Bend Stiffener adapter from flexible end fitting and from bend stiffener flange respectively. Use pneumatic impact wrench to release tension in bolts if required.	Appendix 3 TC1034-HED-6003 Sheet 8
29.	Install 2nd end 7 1/16-in API flange pulling head onto flexible end fitting and secure by flogging bolts tight with pneumatic impact wrench. Tighten bolts to 1,278 ft-lbs. **Important:** Ensure the end fitting and pull head is washed down with freshwater and the sealing face is greased prior to fitment of standard pullhead. (HAZID action ref. 4714-5)	Appendix 2 GS017455-000-DD-5311-0001 Appendix 3 TC1034-HED-6003 Sheet 8
30.	Install 2nd end pull head rigging as per referenced drawing. Put adequate protection onto the bend stiffener for protection (bubble wrap) (S7 HIRA ref. 3.2.13.1)	Appendix 2 MDP-38-HI-DG-0051
31.	Spool remainder of flexible onto reel per the reel packing drawing and when 2nd end is under the 92 reel, secure the 2nd end onto the reel for transportation and storage using the 2 off 3-m soft slings and come-alongs as per the referenced drawing. **Note:** Winch may be attached for holdback of the 2nd end while being spooled on. **Note: Rigging used to secure the pull head to the reel is to be checked daily to ensure still intact and secure. (S7 HIRA ref. 3.2.13.1)**	Appendix 2 MDP-38-HI-DG-0051
32.	Prepare acceptance certificate for jumper and note any punchlist items (e.g. damage, incomplete work, etc.) that should be identified for handover.	Appendix 3 IRN-ISAB1-012

11 Contingency Procedures

Adverse Weather

If adverse weather conditions arise before the 1st end rigging connection for jumper recovery, the Skandi Neptune will suspend operations and sustain the weather until conditions improve.

If adverse weather conditions arise after the 1st end connection, the Skandi Neptune will suspend further jumper recovery and sustain the weather until conditions improve. If necessary (e.g. if the vessel DP can't hold position), the jumper may be temporarily abandoned on the seabed and the ROV-hook from the crane disconnected.

Vessel Navigation and Propulsion

If the D.P. system of interfaces develops a fault, the recovery will be stopped and the vessel will maintain position. Subject to Vessel Masters and OCM's decision, in agreement with the Client, the recovery shall continue and be completed as per normal procedure; or, the decision will be made to temporarily abandon flexible subsea and complete repair onboard.

Appendix 1: Flexible Data Sheet

Technip FLEXI FRANCE	STRUCTURE 2.4 - TECHNICAL DATA SHEET **REFERENCE: 152.61433 REV. 0** IN DATABASE SINCE 3/27/2008	Page : 1 / 1 Job n° : GS017455 Name : BDSILVA Date : 31/05/2010

INTERNAL DIAMETER	6.00"	SWEET SERVICE
DESIGN PRESSURE (dyn / static)	7,125 / 8,240 psi	491 / 568 bars
DESIGN TEMPERATURE	60 °C	
FACTORY TEST PRESSURE	10,700 psi	738 bars
FTP/DP 1.50 (dynamic) 1.30 (static)		

N°	LAYER DESCRIPTION	UTS (MPa)	MYS (MPa)	Mass (Kg/m)	I.D. (mm)	Th. (mm)	SDP (MPa)
1	INTERLOCKED CARCASS 60.0 x 1.5 x 7.5 DUPLEX (FE 04)	660	-	16.91	152.40	7.50	
2	PRESSURE SHEATH RILSAN P40TL TP01			4.44	167.40	7.20	
3	ZETA WIRE 10.0 FI 11	1000	-	40.18	181.80	10.00	380
4	ANTI-WEAR TAPE 75.0 x 1.5 PIPELON (BF 01)			0.91	201.80	1.50	
5	FIRST ARMOUR LAY. FI41 45 Flat wires: 12 x 5 at -30 deg.	1400	-	22.87	204.80	5.00	196
6	ANTI-WEAR TAPE 75.0 x 1.5 PIPELON (BF 01)			0.97	214.80	1.50	
7	SECOND ARMOUR LAY FI41 47 Flat wires: 12 x 5 at 31 deg.	1400	-	24.07	217.80	5.00	238
8	HIGH STRENGTH TAPE G1/PIPELON/KV470/KV470/ESTER/ESTER			1.43	227.80	2.85	
9	EXTERNAL SHEATH HD-FLEX (TP26+TP28) Yellow			4.15	233.50	5.80	

THEORETICAL CHARACTERISTICS	IMPERIAL	METRIC
DIAMETER inside	6.00 in	152.40 mm
DIAMETER outside	9.65 in	245.10 mm
VOLUME internal	0.214 cf/ft	19.85 l/m
VOLUME external	0.508 cf/ft	47.18 l/m
WEIGHT in air empty	77.90 lbf/ft	115.93 kgf/m
WEIGHT in air full of seawater	91.57 lbf/ft	136.28 kgf/m
WEIGHT in seawater empty	45.40 lbf/ft	67.56 kgf/m
WEIGHT in seawater full of seawater	59.08 lbf/ft	87.91 kgf/m
SPECIFIC GRAVITY in sea water empty	2.40	2.40
PRESSURE Nominal bursting	12980 psi	895 bars
HYDROSTATIC collapse pressure lay 2	3843 psi	265 bars
DAMAGING PULL in straight line	1160565 lbf	5162.45 kN
MINIMUM BENDING RADIUS for STORAGE	5.46 ft	1.66 m
BENDING STIFFNESS at 20°C	42089 lbf.ft2	17.39 kN.m2
RELATIVE ELONGATION at design pressure	0.093 %	0.093 %
RELATIVE ELONGATION for 100 kN	0.016437 %	0.016437 %
THERMAL EXCHANGE COEFFICIENT at 20°C	3.97 Btu/hftF	6.87 W/m.K

CONFIDENTIAL - NOT TO DISCLOSE WITHOUT AUTHORIZATION

TECHNIP GROUP - This document contains confidential information. Property of TECHNIP SA – Copyright TECHNIP – All rights reserved.

Appendix 2: Ancillary and Installation Aids Drawings

Drawing Number	Title	Produced by
GS017455-000-DW-5280-0004-1	Permanent Equipment GA with HP 1	Technip
GS017698-000-DW-5280-0001-0	Permanent Equipment GA with TP	Technip
GS017455-000-DD-5311-0004	FSR1 Bolted Connection Drawing	Technip
GS017698-000-DD-5311-0001	FSR2 Bolted Connection Drawing	Technip
GS017455-000-DD-5313-0020	45-Te Friction Clamp GA	Technip
GS017455-000-DD-5313-0021	45-Te Friction Clamp Top Half Assembly	Technip
GS017455-000-DD-5313-0022	45-Te Friction Clamp Bottom Half Assembly	Technip
GS017455-000-DD-5311-0001	7 1/16-in 10k Pull-head	Technip
GS017455-000-DD-5211-0005	Friction Clamp Vertebrae Adaptor Details	Technip
GS017455-000-DD-5313-0012	19 Te Handling Collar	Technip
3837-DDL-3701-1	Upper Riser Assy Bend Stiffener Adapter	2H
3837-DGA-3320-1	URA Installation Padeye Assembly	2H
3837-DGA-0008	Flexible Jumper Layout	2H
W10052702	6-in Bend Restrictor (Vertebrae)	Whitefield
W10060302	Special VBR For Technip End Fitting	Whitefield
W1005902 (2 Sheets)	6-in Vertebrae Adaptation Piece	Whitefield
MDP-38-HI-DG-0072	Rigging Specification Summary 1,060-ft Flexible Wet Park Clump Weight	Technip
CDP-38-HI-DG-0015	Upper 6" Flexible Recovery Rigging	Technip
MDP-38-HI-DG-0045	Upper 6" Flexible Jumper Deployment Rigging from HP1	Technip
MDP-38-HI-DG-0077	Rigging Specification Summary Wet Park 1,060-ft Flexible Kick-Off Spool	Technip
MDP-38-HI-DG-0051	Final Packing for 1060 ft. Flexible on 92 Reel	Technip

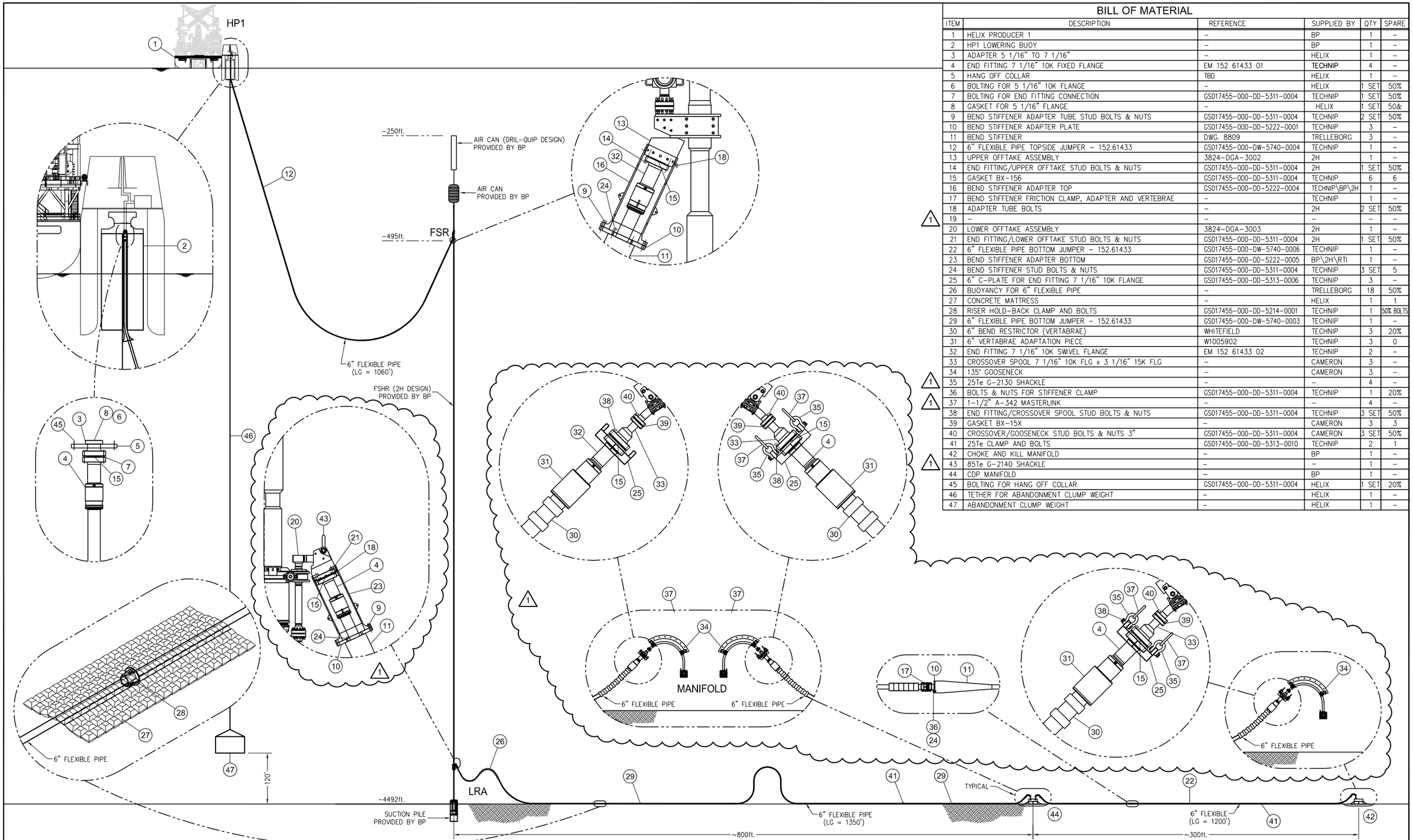

BILL OF MATERIAL

	ITEM	DESCRIPTION	REFERENCE	SUPPLIED BY	QTY	SPARE
	1	HELIX PRODUCER 1	–	BP	1	–
	2	HP1 LOWERING BUOY	–	BP	1	–
	3	ADAPTER 5 1/16" TO 7 1/16"	–	HELIX	1	–
	4	END FITTING 7 1/16" 10K FIXED FLANGE	EM 152 61433 01	TECHNIP	4	–
	5	HANG OFF COLLAR	TBD	HELIX	1	–
	6	BOLTING FOR 5 1/16" 10K FLANGE	–	HELIX	1 SET	50%
	7	BOLTING FOR END FITTING CONNECTION	GS017455-000-DD-5311-0004	TECHNIP	1 SET	50%
	8	GASKET FOR 5 1/16" FLANGE	–	HELIX	1 SET	50&
	9	BEND STIFFENER ADAPTER TUBE STUD BOLTS & NUTS	GS017455-000-DD-5311-0004	TECHNIP	2 SET	50%
	10	BEND STIFFENER ADAPTER PLATE	GS017455-000-DD-5222-0001	TECHNIP	3	–
	11	BEND STIFFENER	DWG. 8809	TRELLEBORG	3	–
	12	6" FLEXIBLE PIPE TOPSIDE JUMPER – 152.61433	GS017455-000-DW-5740-0004	TECHNIP	1	–
	13	UPPER OFFTAKE ASSEMBLY	3824-DGA-3002	2H	1	–
	14	END FITTING/UPPER OFFTAKE STUD BOLTS & NUTS	GS017455-000-DD-5311-0004	2H	1 SET	50%
	15	GASKET BX-156	GS017455-000-DD-5311-0004	TECHNIP	6	6
	16	BEND STIFFENER ADAPTER TOP	GS017455-000-DD-5222-0004	TECHNIP\BP\2H	1	–
	17	BEND STIFFENER FRICTION CLAMP, ADAPTER AND VERTEBRAE	–	TECHNIP	1	–
	18	ADAPTER TUBE BOLTS	–	2H	2 SET	50%
1	19	–	–	–	–	–
	20	LOWER OFFTAKE ASSEMBLY	3824-DGA-3003	2H	1	–
	21	END FITTING/LOWER OFFTAKE STUD BOLTS & NUTS	GS017455-000-DD-5311-0004	2H	1 SET	50%
	22	6" FLEXIBLE PIPE BOTTOM JUMPER – 152.61433	GS017455-000-DW-5740-0006	TECHNIP	1	–
	23	BEND STIFFENER ADAPTER BOTTOM	GS017455-000-DD-5222-0005	BP\2H\RTI	1	–
	24	BEND STIFFENER STUD BOLTS & NUTS	GS017455-000-DD-5311-0004	TECHNIP	3 SET	5
	25	6" C-PLATE FOR END FITTING 7 1/16" 10K FLANGE	GS017455-000-DD-5313-0006	TECHNIP	3	–
	26	BUOYANCY FOR 6" FLEXIBLE PIPE	–	TRELLEBORG	18	50%
	27	CONCRETE MATTRESS	–	HELIX	1	1
	28	RISER HOLD-BACK CLAMP AND BOLTS	GS017455-000-DD-5214-0001	TECHNIP	1	50% BOLTS
	29	6" FLEXIBLE PIPE BOTTOM JUMPER – 152.61433	GS017455-000-DW-5740-0003	TECHNIP	1	–
	30	6" BEND RESTRICTOR (VERTABRAE)	WHITEFIELD	TECHNIP	3	20%
	31	6" VERTABRAE ADAPTATION PIECE	W1005902	TECHNIP	3	0
	32	END FITTING 7 1/16" 10K SWIVEL FLANGE	EM 152 61433 02	TECHNIP	2	–
	33	CROSSOVER SPOOL 7 1/16" 10K FLG x 3 1/16" 15K FLG	–	CAMERON	3	–
	34	135° GOOSENECK	–	CAMERON	3	–
1	35	25Te G-2130 SHACKLE	–	–	4	–
	36	BOLTS & NUTS FOR STIFFENER CLAMP	GS017455-000-DD-5311-0004	TECHNIP	1	20%
1	37	1-1/2" A-342 MASTERLINK	–	–	4	–
	38	END FITTING/CROSSOVER SPOOL STUD BOLTS & NUTS	GS017455-000-DD-5311-0004	TECHNIP	3 SET	50%
	39	GASKET BX-15X	–	CAMERON	3	3
	40	CROSSOVER/GOOSENECK STUD BOLTS & NUTS 3"	GS017455-000-DD-5311-0004	CAMERON	3 SET	50%
	41	25Te CLAMP AND BOLTS	GS017455-000-DD-5313-0010	TECHNIP	2	1
	42	CHOKE AND KILL MANIFOLD	–	BP	1	–
1	43	85Te G-2140 SHACKLE	–	–	1	–
	44	CDP MANIFOLD	–	BP	1	–
	45	BOLTING FOR HANG OFF COLLAR	GS017455-000-DD-5311-0004	HELIX	1 SET	20%
	46	TETHER FOR ABANDONMENT CLUMP WEIGHT	–	HELIX	1	–
	47	ABANDONMENT CLUMP WEIGHT	–	HELIX	1	–

NOTES:
1. SEE CONNECTION DRAWING FOR BOLTING CONNECTION DETAIL: GS017455-000-DD-5311-0004.

REFERENCE:

GS017455-000-DW-5740-0004	6" TOP JUMPER HP1 TO FSR1
GS017455-000-DW-5740-0003	6" BOTTOM JUMPER FSR1 TO CDP MANIFOLD
GS017455-000-DW-5740-0006	6" BOTTOM JUMPER CDP MANIFOLD TO C&K MANIFOLD

REV	DATE	BY	DESCRIPTION	CHKD	ENG	APRVD
1	2 SEPT 10	RIR	AS-BUILT	DBL	RMC	EKE
0	26 AUG 10	RIR	ISSUED FOR CONSTRUCTION	DBL	EKE	JLS
B	19-JUNE-10	DMY	ISSUED FOR REVIEW AND COMMENTS	RIR	BDS	JLS
A	17-JUNE-10	DMY	ISSUED FOR REVIEW AND COMMENTS	MWI	BDS	JLS

Information contained in this document is the work product of Technip USA, Inc. and embodies confidential and proprietary information of Technip USA, Inc. and/or its client. Use of this information is restricted in accordance with conditions specified by the contract between Technip USA, Inc. and its client. Technip USA, Inc. disclaims any and all liabilities for any changes or modifications to this document which are made by any person other than Technip USA, Inc.

CONFIDENTIALITY CATEGORY: C.2

bp

Technip
TECHNIP USA, Inc.

DRAWN	CHECKED	ENGINEER	SCALE
DMY	MWI	BDS	N.T.S.
DATE	DATE	DATE	SHEET
16-JUNE-10	6/18/10	6/18/10	1 OF 1

BP MACONDO CDP

FSR 1 GENERAL ARRANGEMENT WITH HELIX PRODUCER 1

CLIENT APPROVAL

TPUSA DRAWING NUMBER: GS017455-000-DW-5280-0004

DRAWING NUMBER: CDP-39-GE-DG-0065

REV. 1

PLOT: 9/2/2010 1:17 PM BY: IRAWAN RUDI LAST SAVE: 9/2/2010 9:02 AM FILE NAME: R:\PROJECTS\GS017455_CDP1-FSR1\SUBSEA\5280_FREE_STANDING_RISERS\GS017455-000-DW-5280-0004-1.DWG

TECHNIP USA, INC. TBPE FIRM REG. NO. F-3030

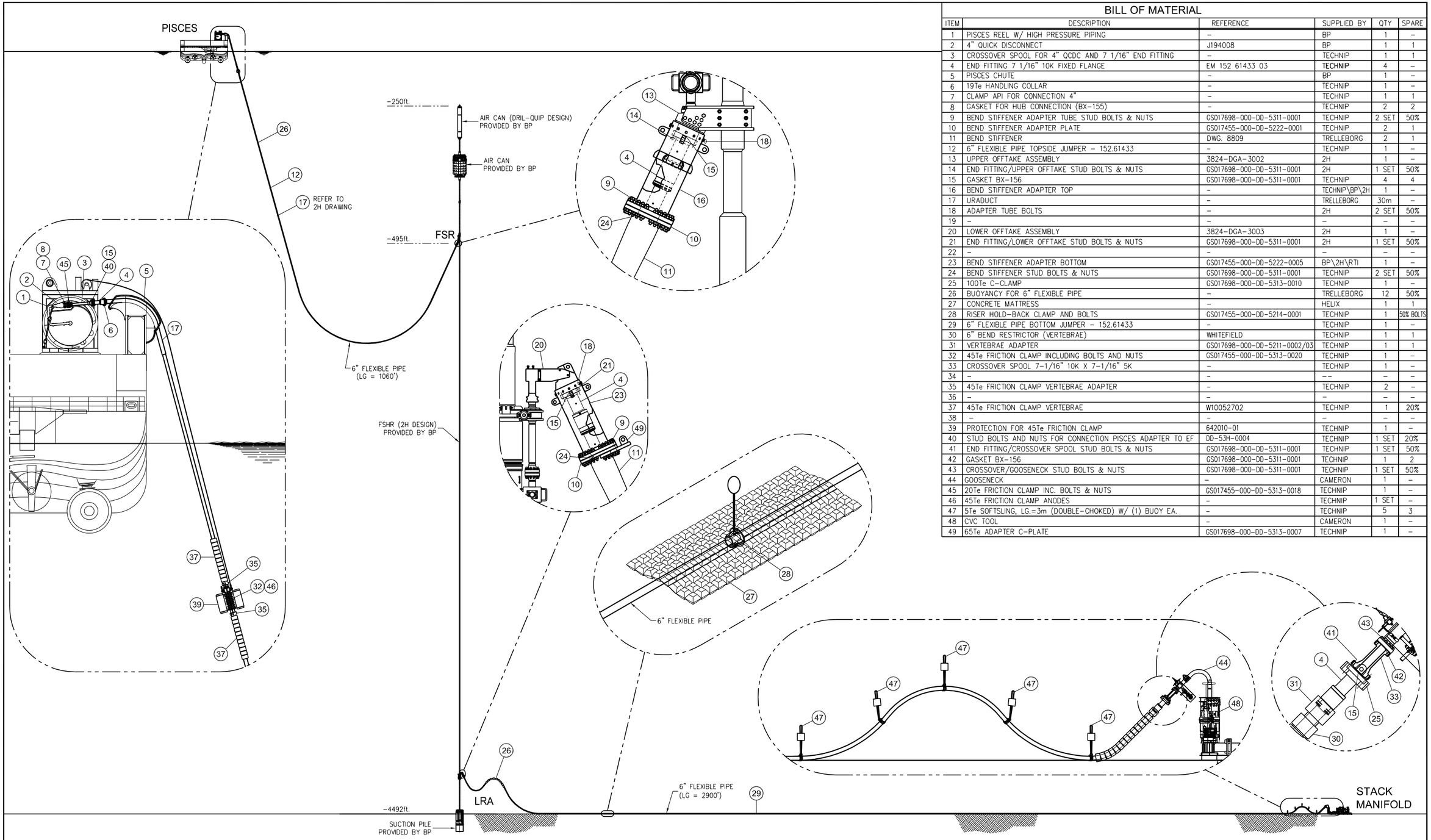

BILL OF MATERIAL

ITEM	DESCRIPTION	REFERENCE	SUPPLIED BY	QTY	SPARE
1	PISCES REEL W/ HIGH PRESSURE PIPING	–	BP	1	–
2	4" QUICK DISCONNECT	J194008	BP	1	1
3	CROSSOVER SPOOL FOR 4" QCDC AND 7 1/16" END FITTING	–	TECHNIP	1	1
4	END FITTING 7 1/16" 10K FIXED FLANGE	EM 152 61433 03	TECHNIP	4	–
5	PISCES CHUTE	–	BP	1	–
6	19Te HANDLING COLLAR	–	TECHNIP	1	–
7	CLAMP API FOR CONNECTION 4"	–	TECHNIP	1	1
8	GASKET FOR HUB CONNECTION (BX-155)	–	TECHNIP	2	2
9	BEND STIFFENER ADAPTER TUBE STUD BOLTS & NUTS	GS017698-000-DD-5311-0001	TECHNIP	2 SET	50%
10	BEND STIFFENER ADAPTER PLATE	GS017455-000-DD-5222-0001	TECHNIP	2	1
11	BEND STIFFENER	DWG. 8809	TRELLEBORG	2	1
12	6" FLEXIBLE PIPE TOPSIDE JUMPER – 152.61433	–	TECHNIP	1	–
13	UPPER OFFTAKE ASSEMBLY	3824-DGA-3002	2H	1	–
14	END FITTING/UPPER OFFTAKE STUD BOLTS & NUTS	GS017698-000-DD-5311-0001	2H	1 SET	50%
15	GASKET BX-156	GS017698-000-DD-5311-0001	TECHNIP	4	4
16	BEND STIFFENER ADAPTER TOP	–	TECHNIP\BP\2H	1	–
17	URADUCT	–	TRELLEBORG	30m	–
18	ADAPTER TUBE BOLTS	–	2H	2 SET	50%
19	–	–	–	–	–
20	LOWER OFFTAKE ASSEMBLY	3824-DGA-3003	2H	1	–
21	END FITTING/LOWER OFFTAKE STUD BOLTS & NUTS	GS017698-000-DD-5311-0001	2H	1 SET	50%
22	–	–	–	–	–
23	BEND STIFFENER ADAPTER BOTTOM	GS017455-000-DD-5222-0005	BP\2H\RTI	1	–
24	BEND STIFFENER STUD BOLTS & NUTS	GS017698-000-DD-5311-0001	TECHNIP	2 SET	50%
25	100Te C-CLAMP	GS017698-000-DD-5313-0010	TECHNIP	1	–
26	BUOYANCY FOR 6" FLEXIBLE PIPE	–	TRELLEBORG	12	50%
27	CONCRETE MATTRESS	–	HELIX	1	1
28	RISER HOLD-BACK CLAMP AND BOLTS	GS017455-000-DD-5214-0001	TECHNIP	1	50% BOLTS
29	6" FLEXIBLE PIPE BOTTOM JUMPER – 152.61433	–	TECHNIP	1	–
30	6" BEND RESTRICTOR (VERTEBRAE)	WHITEFIELD	TECHNIP	1	1
31	VERTEBRAE ADAPTER	GS017698-000-DD-5211-0002/03	TECHNIP	1	1
32	45Te FRICTION CLAMP INCLUDING BOLTS AND NUTS	GS017455-000-DD-5313-0020	TECHNIP	1	–
33	CROSSOVER SPOOL 7-1/16" 10K X 7-1/16" 5K	–	TECHNIP	1	–
34	–	–	––	–	–
35	45Te FRICTION CLAMP VERTEBRAE ADAPTER	–	TECHNIP	2	–
36	–	–	–	–	–
37	45Te FRICTION CLAMP VERTEBRAE	W10052702	TECHNIP	1	20%
38	–	–	–	–	–
39	PROTECTION FOR 45Te FRICTION CLAMP	642010-01	TECHNIP	1	–
40	STUD BOLTS AND NUTS FOR CONNECTION PISCES ADAPTER TO EF	DD-53H-0004	TECHNIP	1 SET	20%
41	END FITTING/CROSSOVER SPOOL STUD BOLTS & NUTS	GS017698-000-DD-5311-0001	TECHNIP	1 SET	50%
42	GASKET BX-156	GS017698-000-DD-5311-0001	TECHNIP	1	2
43	CROSSOVER/GOOSENECK STUD BOLTS & NUTS	GS017698-000-DD-5311-0001	TECHNIP	1 SET	50%
44	GOOSENECK	–	CAMERON	1	–
45	20Te FRICTION CLAMP INC. BOLTS & NUTS	GS017455-000-DD-5313-0018	TECHNIP	1	–
46	45Te FRICTION CLAMP ANODES	–	TECHNIP	1 SET	–
47	5Te SOFTSLING, LG.=3m (DOUBLE-CHOKED) W/ (1) BUOY EA.	–	TECHNIP	5	3
48	CVC TOOL	–	CAMERON	1	–
49	65Te ADAPTER C-PLATE	GS017698-000-DD-5313-0007	TECHNIP	1	–

NOTES:
1. SEE CONNECTION DRAWING FOR BOLTING CONNECTION DETAIL: GS017698-000-DD-5311-0001

REFERENCE:

GS017698-000-DW-5740-0001	6" BOTTOM JUMPER/LRA TO MANIFOLD
GS017698-000-DW-5280-0006	FSR2 – 6" FLEXIBLE TO 135° GOOSENECK
GS017698-000-DW-5280-0008	PISCES REEL TO 6" FLEXIBLE PIPE
GS017698-000-DW-5280-0005	PISCES FSR TO LOWER OFFTAKE ASSEMBLY
GS017698-000-DW-5280-0004	6" FLEXIBLE TO TOP ASSEMBLY

REV	DATE	BY	DESCRIPTION	CHKD	ENG	APRVD
0	20 JULY 10	RIR	ISSUED FOR CONSTRUCTION	DMY	EKE	JLS
B	18 JULY 10	RIR	ISSUED FOR CLIENT REVIEW	DMY	EKE	JLS
A	27 JUNE 10	RIR	ISSUED FOR REVIEW AND COMMENTS	DMY	BDS	JLS

Information contained in this document is the work product of Technip USA, Inc. and embodies confidential and proprietary information of Technip USA, Inc. and/or its client. Use of this information is restricted in accordance with conditions specified by the contract between Technip USA, Inc. and its client. Technip USA, Inc. disclaims any and all liabilities for any changes or modifications to this document which are made by any person other than Technip USA, Inc.

CONFIDENTIALITY CATEGORY: C.2

bp

Technip
TECHNIP USA, Inc.

DRAWN	CHECKED	ENGINEER	SCALE
RIR	DMY	BDS	N.T.S.
DATE	DATE	DATE	SHEET
13 JUNE 10	29-JUNE-10	29-JUNE-10	1 OF 1

BP MACONDO CDP PHASE II

FSR 2 GENERAL ARRANGEMENT
WITH TOISA PISCES

CLIENT APPROVAL

TPUSA DRAWING NUMBER: GS017698-000-DW-5280-0001

DRAWING NUMBER: CDP-39-GE-DG-0087

REV. 0

PLOT: 7/20/2010 4:32 PM BY: IRAWAN RUDI LAST SAVE: 7/20/2010 4:32 PM FILE NAME: R:\PROJECTS\GS017698_CDP2-FSR2\SUBSEA\5280_FREE_STANDING_RISERS\GS017698-000-DW-5280-0001-0.DWG

TECHNIP USA, INC. TBPE FIRM REG. NO. F-3030

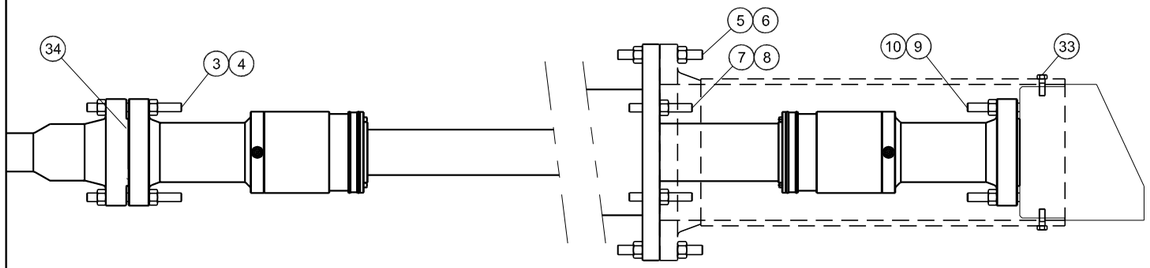

CONNECTION TO HELIX PRODUCER 1 △1

CONNECTION TO UPPER KICK-OFF SPOOL (FSR1) △1

6" FSR1 TO HELIX PRODUCER 1 △1

REF. DWG# GS017455-000-DW-5740-0004

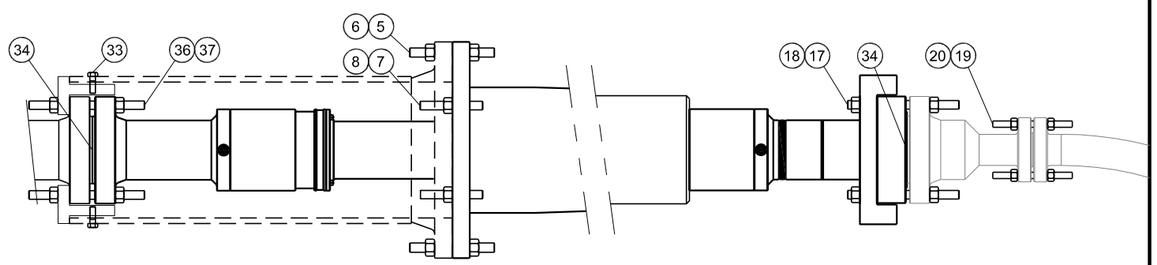

CONNECTION TO LOWER HANG-OFF ASSEMBLY

CONNECTION TO CDP MANIFOLD △1

6" FSR1 TO CDP MANIFOLD △1

REF. DWG# GS017455-000-DW-5740-0003

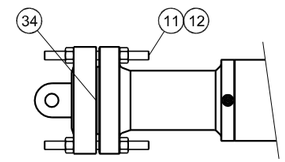

TYP 6" PULLHEAD CONNECTION

△1 CHANGED ALL 6 UNC TO 8 UN

ITEM	DESCRIPTION	QUANTITY	SPARE	TOTAL	SUPPLIER
1	-	-	-	-	TPUSA
2	-	-	-	-	TPUSA
3	STUD BOLT, 1 1/2-8 UN x 16 3/4" LG - TORQUE 1278 FT.LBS.	12	12	24	TPUSA
4	HEAVY HEX NUT, 1 1/2-8 UN	24	24	48	TPUSA
5	STUD BOLT, 1 5/8-8 UN x 12 3/4" LG - TORQUE 1635 FT.LBS.	56	28	84	TPUSA
6	HEAVY HEX NUT, 1 5/8-8 UN	112	56	168	TPUSA
7	STUD, M30 x 250mm - TORQUE 1543 FT.LBS.	54	24	88	TPUSA & TRELLEBORG
8	M30 NUT	54	24	88	TPUSA & TRELLEBORG
9	STUD BOLT, 1 1/2-8 UNC x 15" LG.	-	-	-	RTI
10	HEAVY HEX NUT, 1 1/2-8 UNC	-	-	-	RTI
11	STUD BOLT, 1 1/2-8 UN x 16 3/4" LG - TORQUE 1278 FT.LBS.	72	0	72	TPUSA
12	HEAVY HEX NUT, 1 1/2-8 UN	144	0	144	TPUSA
13	STUD BOLT, 1 1/2-8 UN x 16 3/4" LG - TORQUE 1278 FT.LBS.	12	6	18	TPUSA
14	HEAVY HEX NUT, 1 1/2-8 UN	24	12	36	TPUSA
15	STUD BOLT, 1 1/8-7 UNC x 12 3/4" LG - TORQUE 523 FT.LBS.	16	0	16	TPUSA
16	HEAVY HEX NUT, 1 1/8-7 UNC	32	0	32	TPUSA
17	STUD BOLT, 1 1/2-8 UN x 18" LG - TORQUE 1278 FT.LBS.	24	12	36	TPUSA
18	HEAVY HEX NUT, 1 1/2-8 UN	48	24	72	TPUSA
19	-	-	-	-	CAMERON
20	-	-	-	-	CAMERON
21	STUD BOLT, 1 1/8-7 UNC x 16 3/4" LG - TORQUE 523 FT.LBS.	8	4	12	TPUSA
22	HEAVY HEX NUT, 1 1/8-7 UNC	16	8	24	TPUSA
23	-	-	-	-	CAMERON
24	-	-	-	-	CAMERON
25	STUD BOLT, 1 1/8-7 UNC x 16" LG - TORQUE 526 FT.LBS.	8	4	12	TPUSA
26	HEAVY HEX NUT, 1 1/8-7 UNC	16	8	24	TPUSA
27	-	-	-	-	CAMERON
28	-	-	-	-	CAMERON
29	-	-	-	-	CAMERON
30	-	-	-	-	CAMERON
31	-	-	-	-	CAMERON
32	-	-	-	-	CAMERON
33	HEX BOLT 1 1/2-8 UNC x 5" LG.	-	-	-	RTI
34	GASKET, BX 156	12	12	24	TPUSA
35	GASKET, BX 155	4	4	8	TPUSA
36	STUD BOLT, 1 1/2-8 UN x 15 3/4" LG - TORQUE 1278 FT.LBS.	12	6	18	TPUSA
37	HEAVY HEX NUT, 1 1/2-8 UN	24	12	36	TPUSA

△1

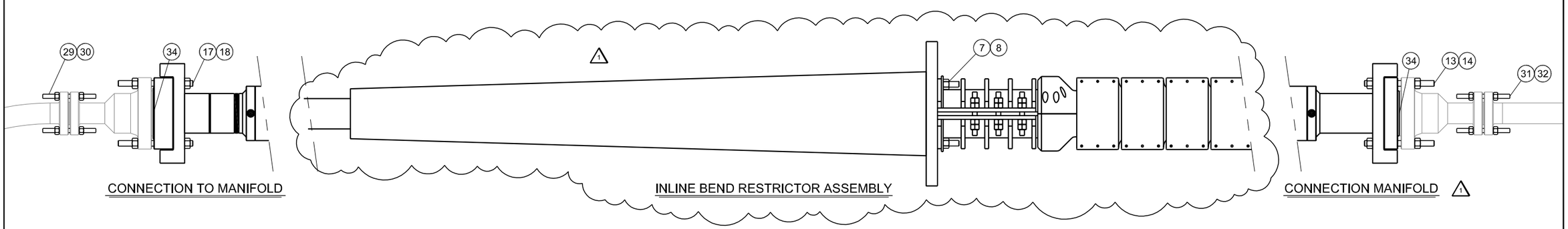

CONNECTION TO MANIFOLD

INLINE BEND RESTRICTOR ASSEMBLY

CONNECTION MANIFOLD △1

6" CDP MANIFOLD TO CHOKE AND KILL MANIFOLD △1

REF. DWG# GS017455-000-DW-5740-0006

1. ALL TPUSA SUPPLIED STUDS TO BE: ASTM A193 GR B7M.
2. ALL TPUSA SUPPLIED NUTS TO BE: ASTM A194 GR 2HM.
3. ALL TPUSA SUPPLIED GASKETS TO BE: LOW CARBON STEEL.
4. STUD M30 TO BE: ASTM A193 GR B7.
5. ALL RTI SUPPLIED STUDS TO BE: ASTM A320 Gr L7M XYLAN COAT.
6. ALL RTI SUPPLIED NUTS TO BE: ASTM A194 Gr 7 XYLAN COAT.

Information contained in this document is the work product of Technip USA, Inc. and embodies confidential and proprietary information of Technip USA, Inc. and/or its client. Use of this information is restricted in accordance with conditions specified by the contract between Technip USA, Inc. and its client. Technip USA, Inc. disclaims any and all liabilities for any changes or modifications to this document which are made by any person other than Technip USA, Inc.

CONFIDENTIALITY CATEGORY: C.2

REV	DATE	BY	DESCRIPTION	CHKD	ENG	APRVD
1	19-JUNE-10	DMY	REVISED AS SHOWN	RIR	DPA	JLS
0	12-JUNE-10	CMC	APPROVED FOR CONSTRUCTION	GSO	DPA	BDS
B	11-JUNE-10	CMC	ISSUED FOR REVIEW AND COMMENTS	GSO	DPA	BDS
A	2-JUNE-10	GSO	ISSUED FOR REVIEW AND COMMENTS	DBL	DPA	YDE

bp

Technip

TECHNIP USA, Inc.

DRAWN	CHECKED	ENGINEER	SCALE
GSO	DBL	DPA	AS NOTED
DATE	DATE	DATE	SHEET
2-JUNE-10	05 JUNE 10	05 JUNE 10	1 OF 1

BP MACONDO CDP PHASE II

△1 FLEXIBLE CONNECTIONS
FSR1 WITH HELIX PRODUCER 1
BILL OF MATERIAL

CLIENT APPROVAL

TPUSA DRAWING NUMBER: GS017455-000-DD-5311-0004

DRAWING NUMBER: CDP-39-GE-DG-0071

REV. 1

TECHNIP USA, INC. TBPE FIRM REG. NO. F-3030

PLOT: 6/23/2010 9:17 AM BY: MYERS, DAVID LAST SAVE: 6/23/2010 9:17 AM FILE NAME: R:\PROJECTS\GS017455_CDP\SUBSEA\5311_PIPELINE_HEADS\GS017455-000-DD-5311-0004-1.DWG

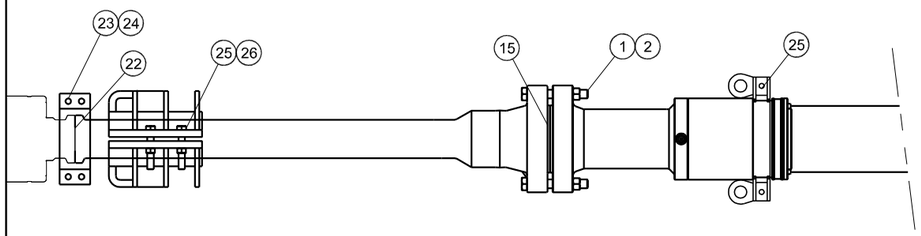

CONNECTION TO PISCES

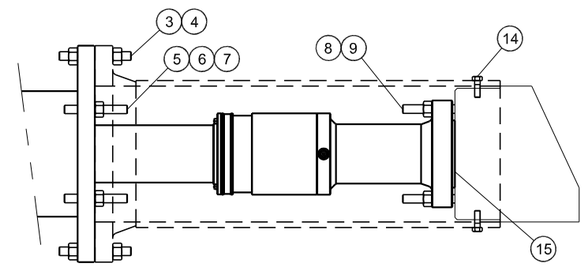

CONNECTION TO UPPER KICK-OFF SPOOL
(FSR 2)

6" FSR TO PISCES
REF. DWG# GS017455-000-DW-5740-0007

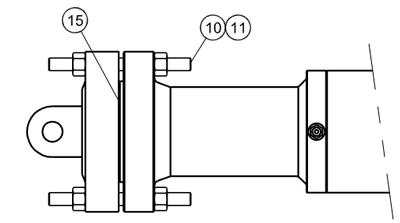

TYP 6" PULLHEAD CONNECTION

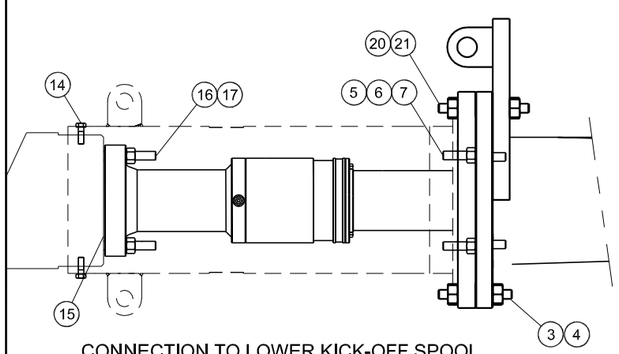

CONNECTION TO LOWER KICK-OFF SPOOL
(FSR 2)

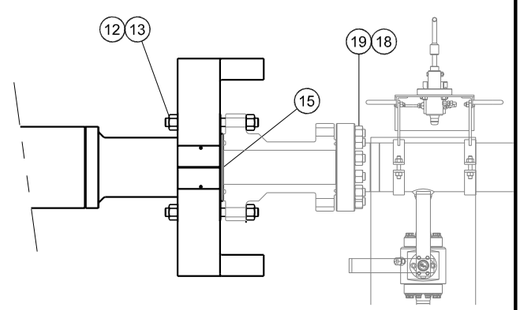

CONNECTION TO STACK MANIFOLD

6" FSR 2 TO STACK MANIFOLD
REF. DWG# GS017698-000-DW-5740-0001

ITEM	DESCRIPTION	QUANTITY	SPARE	TOTAL	SUPPLIER
1	STUD BOLT, 1 1/2-8 UNC x 16 3/4" LG - TORQUE: 733 ftlb	12	6	18	TPUSA
2	HEAVY HEX NUT, 1 1/2-8 UNC	24	12	36	TPUSA
3	STUD BOLT, 1 5/8-8 UNC x 12 3/4" LG - TORQUE: 934 ftlb	43	21	64	TPUSA
4	HEAVY HEX NUT, 1 5/8-8 UNC	86	43	129	TPUSA
5	STUD, M30 x 250mm - TORQUE: 354 ftlb	32	16	48	TPUSA
6	NUT, M30	32	16	48	TPUSA
7	WASHER, 33mm x 56mm x 4m	32	16	48	TPUSA
8	STUD BOLT, 1 1/2-8 UNC x 15" LG	–	--	--	2H
9	HEAVY HEX NUT, 1 1/2-8 UNC	–	--	--	2H
10	STUD BOLT, 1 1/2-8 UNC x 16 3/4" LG - TORQUE: 733 ftlb	48	0	48	TPUSA
11	HEAVY HEX NUT, 1 1/2-8 UNC	96	0	96	TPUSA
12	———	–	--	--	OILSTATE
13	———	–	--	--	OILSTATE
14	HEX BOLT, 1 1/2-8 UNC x 5" LG	–	--	--	2H
15	GASKET, BX 156	8	4	12	TPUSA
16	STUD BOLT, 1 1/2-8 UNC x 15 3/4" LG - TORQUE: 733 ftlb	12	6	18	TPUSA
17	HEAVY HEX NUT, 1 1/2-8 UNC	12	6	18	TPUSA
18	———	–	--	--	OILSTATE
19	———	–	--	--	OILSTATE
20	STUD BOLT, 1 5/8-8 UNC x 15 3/4" LG - TORQUE: 934 ftlb	13	3	16	TPUSA
21	HEAVY HEX NUT, 1 5/8-8 UNC	26	6	32	TPUSA
22	GASKET, BX 155	2	2	4	TPUSA
23	STUD BOLT, 1 1/8-8 UNC x 9 3/4" LG - TORQUE: 305 ftlb.	4	4	8	TPUSA
24	HEAVY HEX NUT, 1 1/8-8 UNC	8	8	16	TPUSA
25	HEX HEAD BOLT, 1 1/8-8 UNC x 6" LG - TORQUE: 660 ftlb.	4	4	8	TPUSA
26	HEAVY HEX NUT, 1 1/8-8 UNC	4	4	8	TPUSA
–	–	–	--	--	–

1. ALL TPUSA SUPPLIED STUDS TO BE: ASTM A193 GR B7M, XYLAN COATED.
2. ALL TPUSA SUPPLIED NUTS TO BE: ASTM A194 GR 2HM. XYLAN COATED.
3. ALL TPUSA SUPPLIED GASKETS TO BE: LOW CARBON STEEL.
4. STUD M30 TO BE: ASTM A193 GR B7. XYLAN COATED.
5. ALL TORQUE VALUES ARE FOR COATED BOLTS, 50% YIELD.
6. ITEM 12, 13, 18, 19 WILL BE SUPPLIED BY TECHNIP AS SPARE AS APPROVED BY BP IN PREVIOUS DESIGN.

Information contained in this document is the work product of Technip USA, Inc. and embodies confidential and proprietary information of Technip USA, Inc. and/or its client. Use of this information is restricted in accordance with conditions specified by the contract between Technip USA, Inc. and its client. Technip USA, Inc. disclaims any and all liabilities for any changes or modifications to this document which are made by any person other than Technip USA, Inc.

CONFIDENTIALITY CATEGORY: C.2

REV	DATE	BY	DESCRIPTION	CHKD	ENG	APRVD
0	18 JULY 10	DMY	ISSUED FOR CONSTRUCTION	RIR	DPA	EKE
E	18 JULY 10	DMY	ISSUED FOR APPROVAL	RIR	DPA	EKE
D	14 JULY 10	RIR	ISSUED FOR CLIENT REVIEW	DMY	DPA	EKE
C	09 JULY 10	CMC	ISSUED FOR CLIENT REVIEW	RIR	DPA	YDE
B	06-JULY-10	DHO	ISSUED FOR COMMENTS	CAL	DPA	YDE
A	24-JUNE-10	CNG	ISSUED FOR REVIEW AND COMMENTS	GSO	DPA	BDS

bp

Technip
TECHNIP USA, Inc.

DRAWN	CHECKED	ENGINEER	SCALE
CNG	GSO	DPA	AS NOTED
DATE	DATE	DATE	SHEET
24-JUNE-10	24-JUNE-10	24-JUNE-10	1 OF 1

BP MACONDO CDP PHASE II

FLEXIBLE CONNECTIONS
CDP2 - TOISA PISCES
BILL OF MATERIAL

CLIENT APPROVAL

TPUSA DRAWING NUMBER GS017698-000-DD-5311-0001

DRAWING NUMBER CDP-39-GE-DG-0085

REV. 0

PLOT: 7/18/2010 1:45 PM BY: IRAWAN RUDI LAST SAVE: 7/18/2010 1:44 PM FILE NAME: R:\PROJECTS\GS017698_CDP2-FSR2\SUBSEA\5311_PIPELINE_HEADS\GS017698-000-DD-5311-0001-0.DWG

TECHNIP USA, INC. TBPE FIRM REG. NO. F-3030

TORQUE TABLE		
1.25" CLAMP STUDS	METRIC	IMPERIAL
TENSION	156 kn	35 kips
COEFFICIENT OF FRICTION	0.07	0.07
TORQUE FACTOR	3.218 mm	0.127 INCH
TORQUE	502 N-m	370 lb-ft

BILL OF MATERIAL

ITEM #	QTY.	DESCRIPTION	MATERIAL	REMARKS
200	2	PIPE 12 3/4" X 1 1/2" WT.	ASTM A572 Gr. 50	
201	2	TOP HINGE PLATE 1"	ASTM A572 Gr. 50	
202	20	RIB PLATE 1"	ASTM A572 Gr. 50	
203	2	BOLTING PLATE 1 1/4"	ASTM A572 Gr. 50	
204	2	TOP HINGE PLATE 1"	ASTM A572 Gr. 50	
205	4	BOTTOM HINGE PLATE 1"	ASTM A572 Gr. 50	
206	20	THREADED STUD 1 1/4" 24" Lg.	ASTM A320 L7M	
207	1	HINGE PIN 1" 54" Lg.	ASTM A320 L7	
208	4	1" FLAT WASHER	ASTM F436 TYPE 1	
209	10	1" - 8 UNC HEX NUT	ASTM A 194 7M	
210	80	1 1/4 - 8 HEX NUT	ASTM A194 7M	
211	2	PADEYE RETAINER PLATE 1 1/2"	ASTM A572 GR. 50	
212	14	RETAINER RING GUSSET PLATE 1"	ASTM A572A GR. 50	
213	4	PADEYE PLATE 1"	ASTM A572 GR. 50	
214	2	SWIVEL PADEYE PIPE 16"OD X 1.219 WT.	API 5L GR. X52	
215	4	SWIVEL PADEYE PLATE 1 1/4"	ASTM A572 GR. 50	
216	4	SWIVEL PADEYE CHEEK PLATE 1/2"	ASTM A572 GR. 50	
217	6	HEX HEAD BOLT 1" - 8 UNC 4 1/2" Lg.	ASTM A320 L7M	
218	2	GALVOTEC 11 Lb ANODE		CW III OR EQUIVALENT
219	2	GALVOTEC 3 Lb ANODE		CW III OR EQUIVALENT
220	4	CLAMP RETAINER ROLLED PLATE 1 1/8"	ASTM A572 Gr. 50	
221	4	PADEYE STIFFENER PLATE 1"	ASTM A572 Gr. 50	
222	6	1" LOCK WASHER	ASTM F436 TYPE 1	

APPROXIMATE WEIGHT 1,950 Lbs.

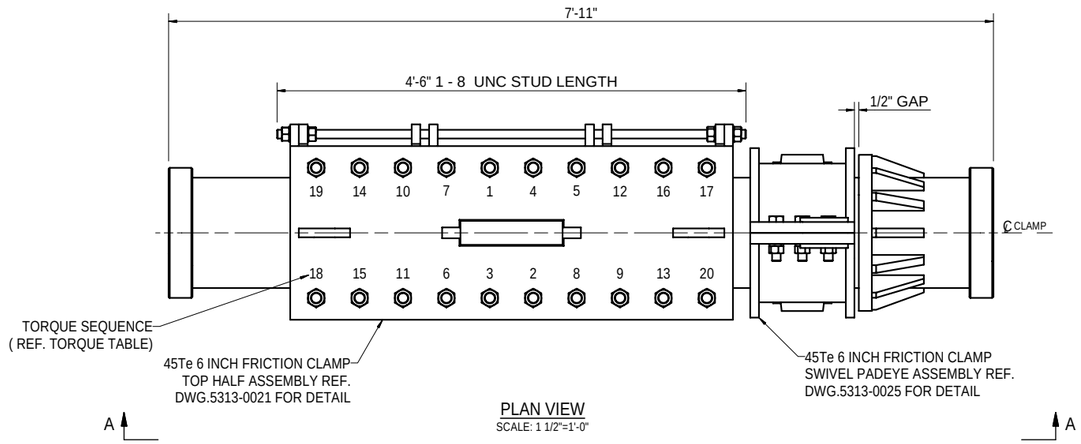

PLAN VIEW
SCALE: 1 1/2"=1'-0"

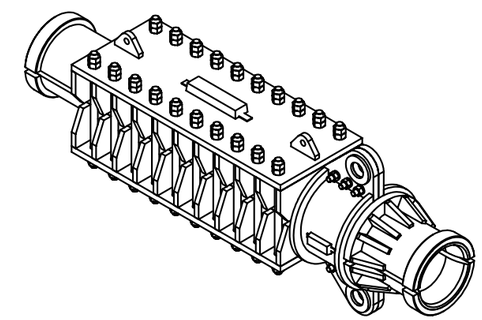

ISOMETRIC VIEW
SCALE: 1"=1'-0"

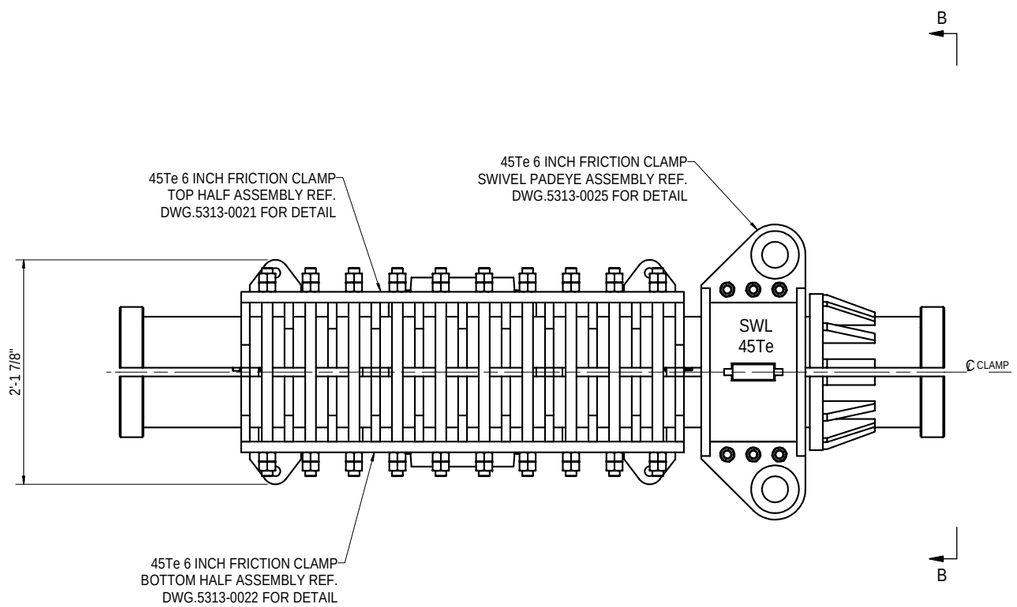

VIEW A
SCALE: 1 1/2"=1'-0"

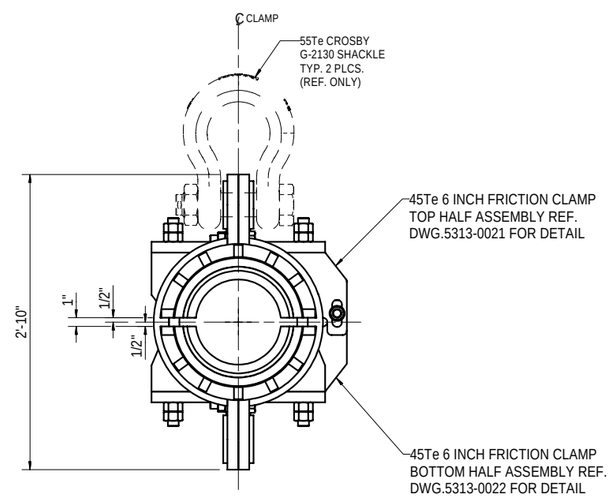

VIEW B
SCALE: 1 1/2"=1'-0"

NOTES
1. INSIDE DIAMETER TO BE SMOOTH & FREE OF PAINT.
2. REMOVE ALL SHARP EDGES & GRIND WELD AREAS IN INSIDE DIAMETER.
3. MARKINGS SHALL BE OIL BASED BLACK GLOSS 1/2" MIN. STENCIL.
4. S.I.T. MUST BE PERFORMED PRIOR TO USE.
5. ALL MATERIAL SHALL BE CERTIFIED.
6. ALL WELDING TO BE 100% NDT & MPI.
7. TOLERANCES ARE: ANGULAR +/- 1° EXCEPT WHERE NOTED.
LINEAR +/- 0.04"
8. FINISH: WIRE BRUSH & PRIMER 2" UNDERCOAT 2 LAYERS MIN. 30 MICRONS OF SAFETY YELLOW. (AMERLOCK 400)
9. BOLT HOLES TO BE FREE OF PAINT.

REFERENCE DRAWINGS:

GS017455-000-DD-5313-0021 - 45Te 6 INCH FRICTION CLAMP TOP HALF ASSEMBLY
GS017455-000-DD-5313-0022 - 45Te 6 INCH FRICTION CLAMP BOTTOM HALF ASSEMBLY
GS017455-000-DD-5313-0023 - 45Te 6 INCH FRICTION CLAMP COMPONENT PARTS (TOP AND BOTTOM)
GS017455-000-DD-5313-0025 - 45Te 6 INCH FRICTION CLAMP SWIVEL PADEYE

REV	DATE	BY	DESCRIPTION	CHKD	ENG	APRVD
0	14-JUNE-10	DHO	APPROVED FOR CONSTRUCTION	GSO	MWA	TST
A	11-JUNE-10	DHO	ISSUED FOR REVIEW AND COMMENT	GSO	MWA	TST

Information contained in this document is the work product of Technip USA, Inc. and embodies confidential and proprietary information of Technip USA, Inc. and/or its client. Use of this information is restricted in accordance with conditions specified by the contract between Technip USA, Inc. and its client. Technip USA, Inc. disclaims any and all liabilities for any changes or modifications to this document which are made by any person other than Technip USA, Inc.

CONFIDENTIALITY CATEGORY: C2

File name: C:\000-Vault\GS017455_CDP\CLAMP_1\DRAWINGS\GS017455-000-DD-5313-0020.idw

INVENTOR

bp

Technip
TECHNIP USA, Inc.

BP MACONDO CDP PHASE II

45Te 6 INCH FRICTION CLAMP
GENERAL ARRANGEMENT

DRAWN	CHECKED	ENGINEER	SCALE	CLIENT APPROVAL	TPUSA DRAWING NUMBER	REV
DHO	GSO	MWA	AS NOTED		GS017455-000-DD-5313-0020	0
DATE 08-JUNE-10	DATE 11-JUNE-10	DATE 11-JUNE-10	SHEET		CLIENT DRAWING NUMBER CDP-39-GE-DG-0072	

TECHNIP USA, INC. TBPE FIRM REG. NO. F-3030

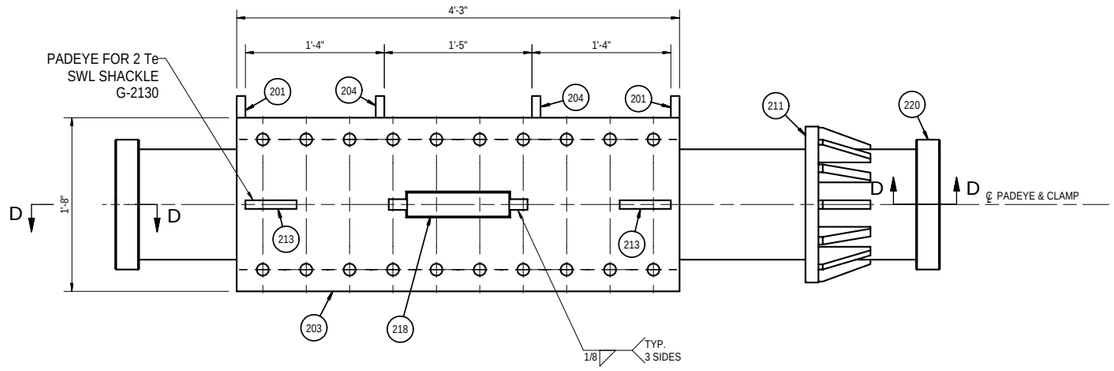

FRICTION CLAMP TOP HALF ASSEMBLY

SCALE 1 1/2"=1'-0"

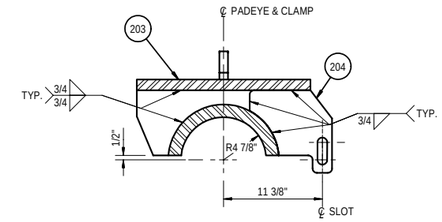

SECTION A

SCALE: 1 1/2"=1'-0"

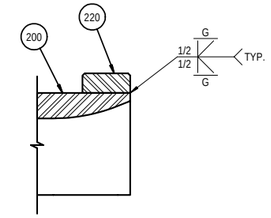

SECTION D

SCALE: 3"=1'-0"

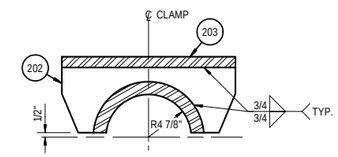

SECTION B

SCALE: 1 1/2"=1'-0"

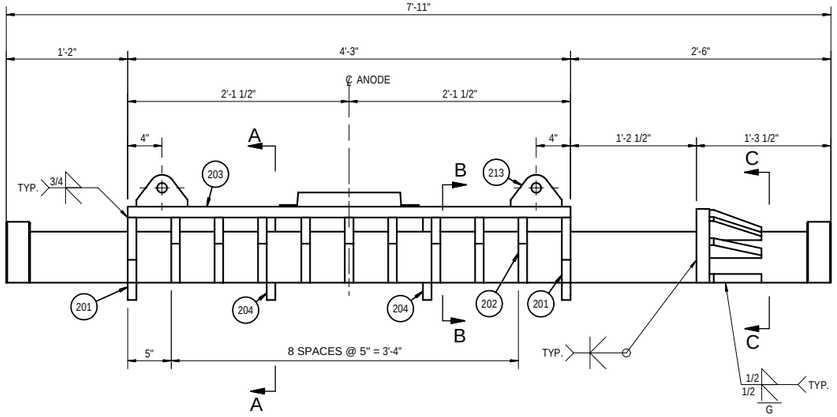

ELEVATION VIEW

SCALE: 1 1/2"=1'-0"

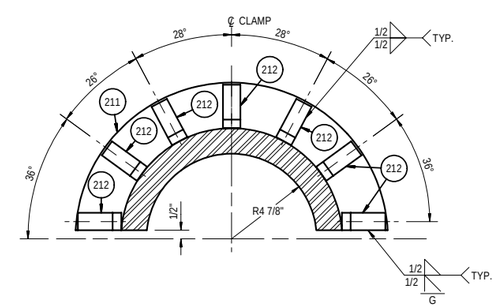

SECTION C

SCALE: 3"=1'-0"

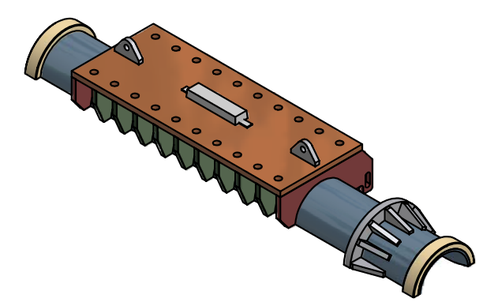

ISOMETRIC VIEW

SCALE: 1 1/2"=1'-0"

NOTES

1. INSIDE DIAMETER TO BE SMOOTH & FREE OF PAINT.
2. REMOVE ALL SHARP EDGES & GRIND WELD AREAS IN INSIDE DIAMETER.
3. MARKINGS SHALL BE OIL BASED BLACK GLOSS 1/2" MIN. STENCIL.
4. S.I.T. MUST BE PERFORMED PRIOR TO USE.
5. ALL MATERIAL SHALL BE CERTIFIED.
6. ALL WELDING TO BE 100% NDT & MPI.
7. TOLERANCES ARE: ANGULAR +/- 1° EXCEPT WHERE NOTED.
   LINEAR +/- 0.04"
8. FINISH: WIRE BRUSH & PRIMER 2" UNDERCOAT 2 LAYERS MIN. 30 MICRONS OF SAFETY YELLOW. (AMERLOCK 400)
9. BOLT HOLES TO BE FREE OF PAINT.

Information contained in this document is the work product of Technip USA, Inc. and embodies confidential and proprietary information of Technip USA, Inc. and/or its client. Use of this information is restricted in accordance with conditions specified by the contract between Technip USA, Inc. and its client. Technip USA, Inc. disclaims any and all liabilities for any changes or modifications to this document which are made by any person other than Technip USA, Inc.

CONFIDENTIALITY CATEGORY: C2

INVENTOR

File name: C:\000-Vault\GS017455_CDP\CLAMP_1\DRAWINGS\GS017455-000-DD-5313-0021.idw

REFERENCE DRAWINGS:

GS017455-000-DD-5313-0020 - 45Te 6 INCH FRICTION CLAMP GENERAL ARRANGEMENT
GS017455-000-DD-5313-0022 - 45Te 6 INCH FRICTION CLAMP BOTTOM HALF ASSEMBLY
GS017455-000-DD-5313-0023 - 45Te 6 INCH FRICTION CLAMP COMPONENT PARTS(TOP AND BOTTOM)

REV	DATE	BY	DESCRIPTION	CHKD	ENG	APRVD
0	14-JUNE-10	DHO	APPROVED FOR CONSTRUCTION	GSO	MWA	TST
A	11-JUNE-10	DHO	ISSUED FOR REVIEW AND COMMENT	GSO	MWA	TST

bp

Technip
TECHNIP USA, Inc.

BP MACONDO CDP PHASE II

45Te 6 INCH FRICTION CLAMP
TOP HALF ASSEMBLY

DRAWN	CHECKED	ENGINEER	SCALE	CLIENT APPROVAL	TPUSA DRAWING NUMBER	REV
DHO	GSO	MWA	AS NOTED		GS017455-000-DD-5313-0021	0
DATE 08-JUNE-10	DATE 11-JUNE-10	DATE 11-JUNE-10	SHEET		CLIENT DRAWING NUMBER CDP-39-GE-DG-0073	

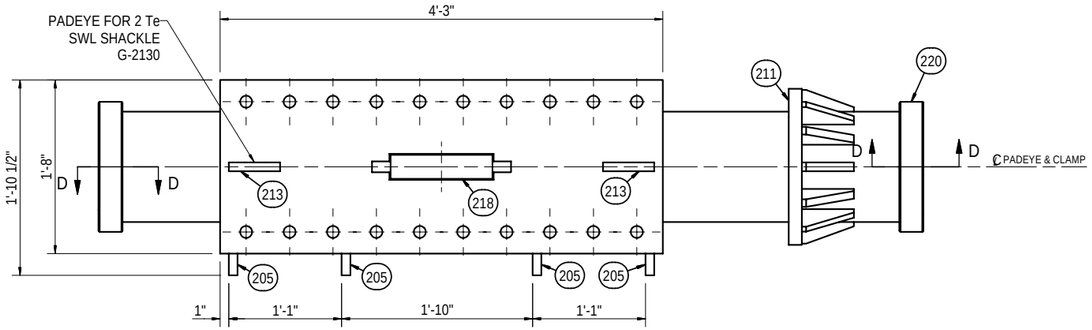

FRICTION CLAMP BOTTOM HALF ASSEMBLY
SCALE: 1 1/2"=1'-0"

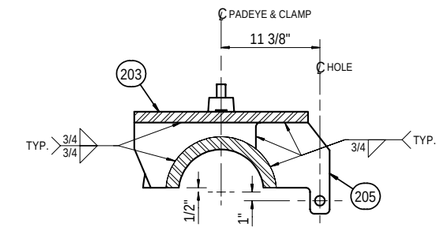

SECTION A
SCALE: 1 1/2"=1'-0"

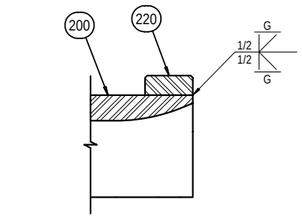

SECTION D
SCALE: 3"=1'-0"

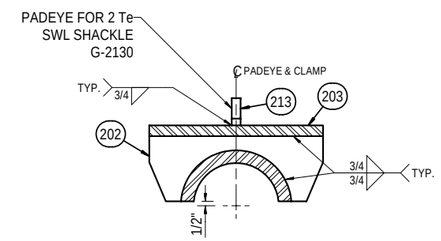

SECTION B
SCALE: 1 1/2"=1'-0"

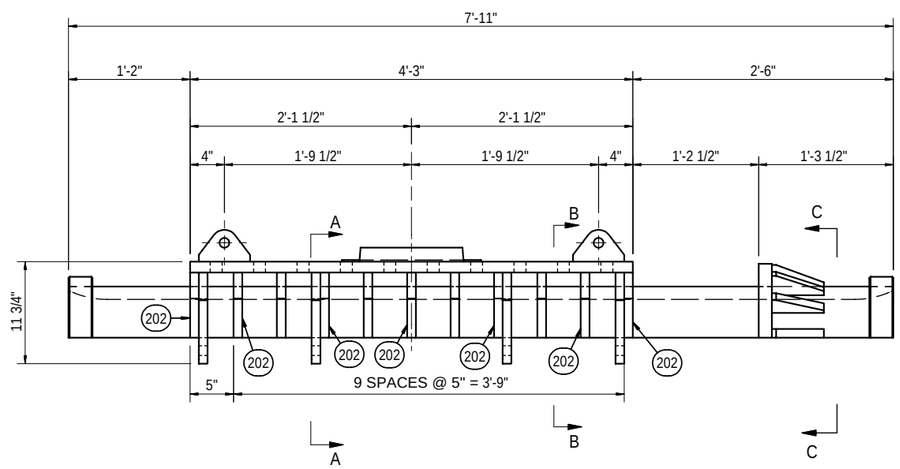

ELEVATION VIEW
SCALE: 1 1/2"=1'-0"

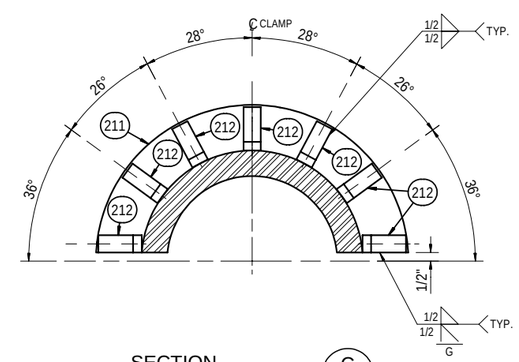

SECTION C
SCALE: 3"=1'-0"

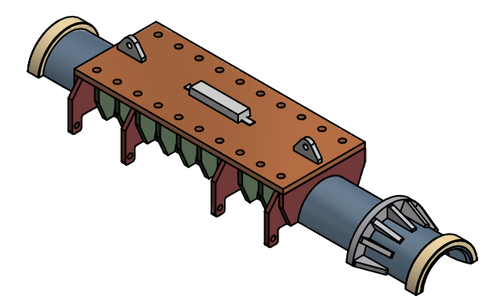

ISOMETRIC VIEW
SCALE: 1"=1'-0"

NOTES
1. INSIDE DIAMETER TO BE SMOOTH & FREE OF PAINT.
2. REMOVE ALL SHARP EDGES & GRIND WELD AREAS IN INSIDE DIAMETER.
3. MARKINGS SHALL BE OIL BASED BLACK GLOSS 1/2" MIN. STENCIL.
4. S.I.T. MUST BE PERFORMED PRIOR TO USE.
5. ALL MATERIAL SHALL BE CERTIFIED.
6. ALL WELDING TO BE 100% NDT & MPI.
7. TOLERANCES ARE: ANGULAR +/- 1° EXCEPT WHERE NOTED.
LINEAR +/- 0.04"
8. FINISH: WIRE BRUSH & PRIMER 2" UNDERCOAT 2 LAYERS MIN. 30 MICRONS OF SAFETY YELLOW. (AMERLOCK 400)
9. BOLT HOLES TO BE FREE OF PAINT.

Information contained in this document is the work product of Technip USA, Inc. and embodies confidential and proprietary information of Technip USA, Inc. and/or its client. Use of this information is restricted in accordance with conditions specified by the contract between Technip USA, Inc. and its client. Technip USA, Inc. disclaims any and all liabilities for any changes or modifications to this document which are made by any person other than Technip USA, Inc.

CONFIDENTIALITY CATEGORY: C2

INVENTOR
File name: C:\000-Vault\GS017455_CDP\CLAMP_1\DRAWINGS\GS017455-000-DD-5313-0022.idw

REFERENCE DRAWINGS:
GS017455-000-DD-5313-0020 - 45Te 6 INCH FRICTION CLAMP GENERAL ARRANGEMENT
GS017455-000-DD-5313-0021 - 45Te 6 INCH FRICTION CLAMP TOP HALF ASSEMBLY
GS017455-000-DD-5313-0023 - 45Te 6 INCH FRICTION CLAMP COMPONENT PARTS(TOP AND BOTTOM)

REV	DATE	BY	DESCRIPTION	CHKD	ENG	APRVD
0	14-JUNE-10	DHO	APPROVED FOR CONSTRUCTION	GSO	MWA	TST
A	11-JUNE-10	DHO	ISSUED FOR REVIEW AND COMMENT	GSO	MWA	TST

bp

Technip
TECHNIP USA, Inc.

BP MACONDO CDP PHASE II

45Te 6 INCH FRICTION CLAMP
BOTTOM HALF ASSEMBLY

DRAWN	CHECKED	ENGINEER	SCALE	CLIENT APPROVAL	TPUSA DRAWING NUMBER	REV
DHO	GSO	MWA	AS NOTED		GS017455-000-DD-5313-0022	0
DATE 08-JUNE-10	DATE 11-JUNE-10	DATE 11-JUNE-10	SHEET		CLIENT DRAWING NUMBER CDP-39-GE-DG-0074	

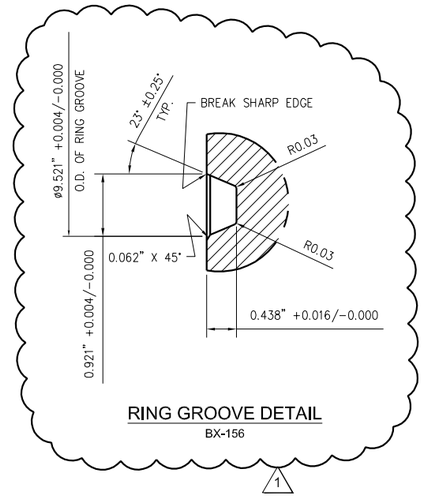

RING GROOVE DETAIL
BX-156

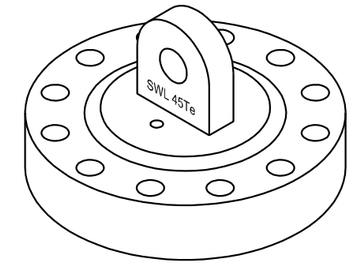

ISOMETRIC VIEW

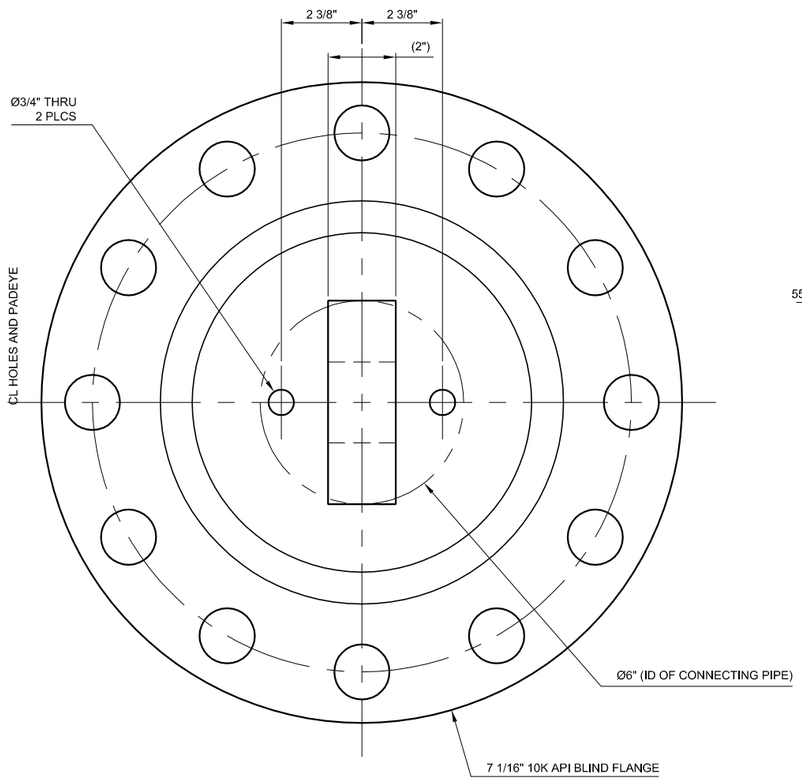

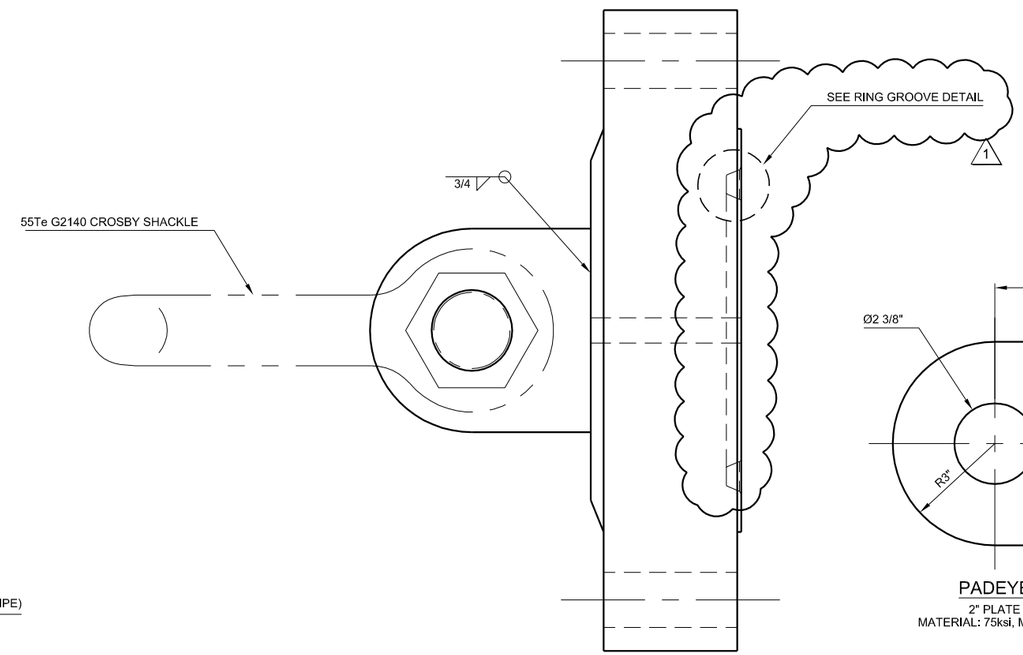

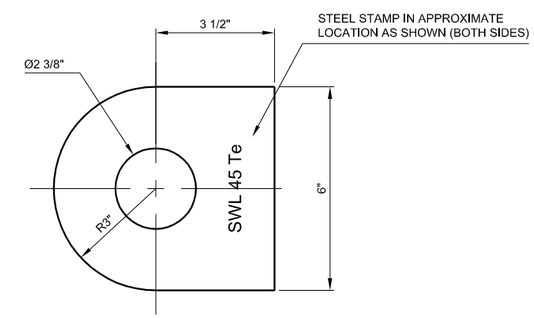

PADEYE
2" PLATE
MATERIAL: 75ksi, MINIMUM

1. APPROXIMATE WEIGHT OF COMPLETE ASSEMBLY: 325 LBS.
2. LOAD TEST = 57 Te [LLOYDS (1.04x SWL) + 9.6 Te]
3. TEST FIT SHACKLE PRIOR TO SHIPPING.

Information contained in this document is the work product of Technip USA, Inc. and embodies confidential and proprietary information of Technip USA, Inc. and/or its client. Use of this information is restricted in accordance with conditions specified by the contract between Technip USA, Inc. and its client. Technip USA, Inc. disclaims any and all liabilities for any changes or modifications to this document which are made by any person other than Technip USA, Inc.

CONFIDENTIALITY CATEGORY: C.2

REV	DATE	BY	DESCRIPTION	CHKD	ENG	APRVD
1	13 JUNE 10	RIR	REVISED TO SHOW RING GROOVE DETAIL	DMY	TST	MWA
0	01-JUNE-10	DMY	APPROVED FOR CONSTRUCTION	MWI	JPA	TST
A	29-MAY 2010	GSO	ISSUED FOR REVIEW AND COMMENTS	MGW	JPA	TST

bp

Technip
TECHNIP USA, Inc.

BP MACONDO CDP PHASE II

45Te PULLHEAD FABRICATION
USING 7 1/16" 10K API BLIND FLANGE

DRAWN	CHECKED	ENGINEER	SCALE
GSO	MGW	JPA	2X
DATE	DATE	DATE	SHEET
29-MAY 2010	5/29/10	5/29/10	1 OF 1

CLIENT APPROVAL

TPUSA DRAWING NUMBER: GS017455-000-DD-5311-0001
DRAWING NUMBER: CDP-39-GE-DG-0016
REV. 1

PLOT: 6/16/2010 4:55 PM BY: IRAWAN RUDI LAST SAVE: 6/16/2010 4:55 PM FILE NAME: R:\PROJECTS\GS017455_CDP\SUBSEA\5311_PIPELINE_HEADS\GS017455-000-DD-5311-0001-1.DWG

TECHNIP USA, INC. TBPE FIRM REG. NO. F-3030

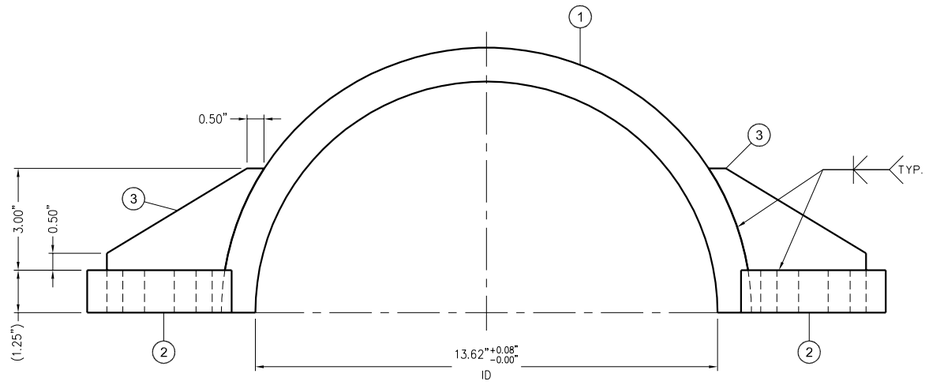

PLAN VIEW

SCALE: AS-SHOWN

BILL OF MATERIAL

ITEM	QTY.	DESCRIPTION	MATERIAL	REMARKS
1	2	1" THK. PL.	MIN. GRADE 50ksi	–
2	4	1-1/4" THK. PL.	MIN. GRADE 56ksi	–
3	8	1/2" THK. PL.	MIN. GRADE 50ksi	–
4	2	3/4"-10 UNC x 4-1/2 LG. HEX BOLT	ASTM A320 Gr. L7M	–
5	2	3/4"-10 UNC HEX NUT	ASTM A194 7M	–
6	2	3/4" WASHER	ASTM F436	–

Approximate Assembly Weight = 77 lbs (35 kgs)

BILL OF MATERIAL ABOVE IS FOR INFORMATION ONLY AND IS NOT TO BE USED AS A CUTTING LIST.

NOTES:

1. ALL DIMENSIONS ARE IN INCHES U.N.O.
2. DO NOT SCALE DRAWING.
3. ALL WELDS TO BE IN ACCORDANCE WITH A.W.S. D1.1 SPEC.
4. REMOVE ALL BURRS, SHARP EDGES, AND WELD SPATTER.
5. GENERAL FABRICATION TOLERANCES: LINEAR: ±0.08"
   ANGULAR: ±1°
6. SAFE WORKING LOAD = 19Te
7. N.D.T. INSPECTION: ALL WELDS 100% MPI PRIOR TO PULL TEST
   UT ALL FULL PEN. WELDS PRIOR TO PULL TEST
   MPI ALL WELDS AFTER PULL TEST.
8. ITEM TO BE MARKED: ASSEMBLY SWL 19Te
   ON BOTH SIDES USING 1/2" HIGH BLACK LETTERS.
9. FINISH: BLASTED AND UNDERCOAT WITH PRIMER.
   TOP COAT OIL BASED WHITE GLOSS.
10. ASSEMBLY TO BE LOAD TESTED TO 19Te.
11. SHACKLE FIT-UP REQUIRED PRIOR TO SHIPPING.

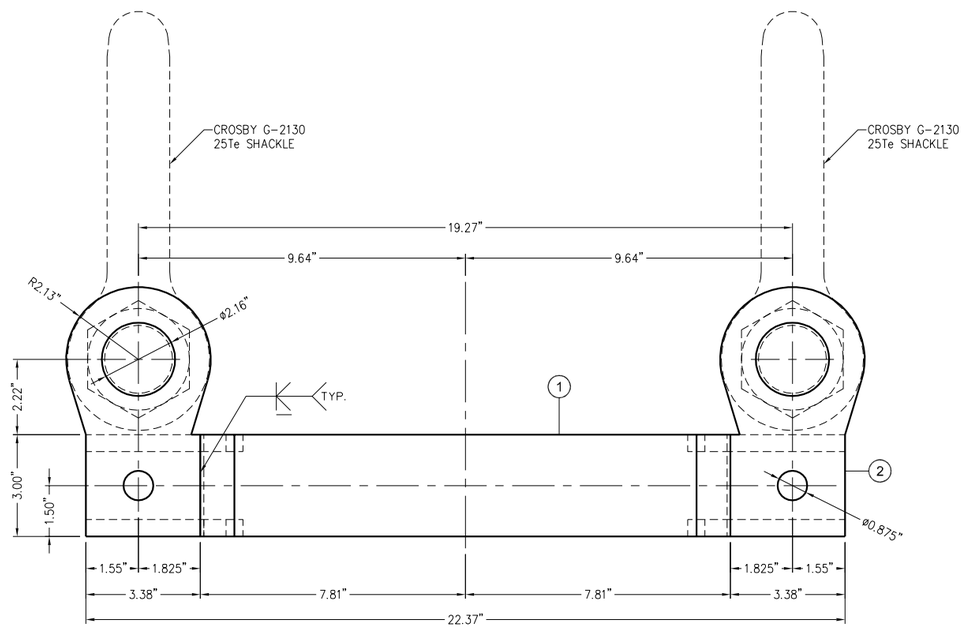

ELEVATION VIEW

SCALE: AS-SHOWN

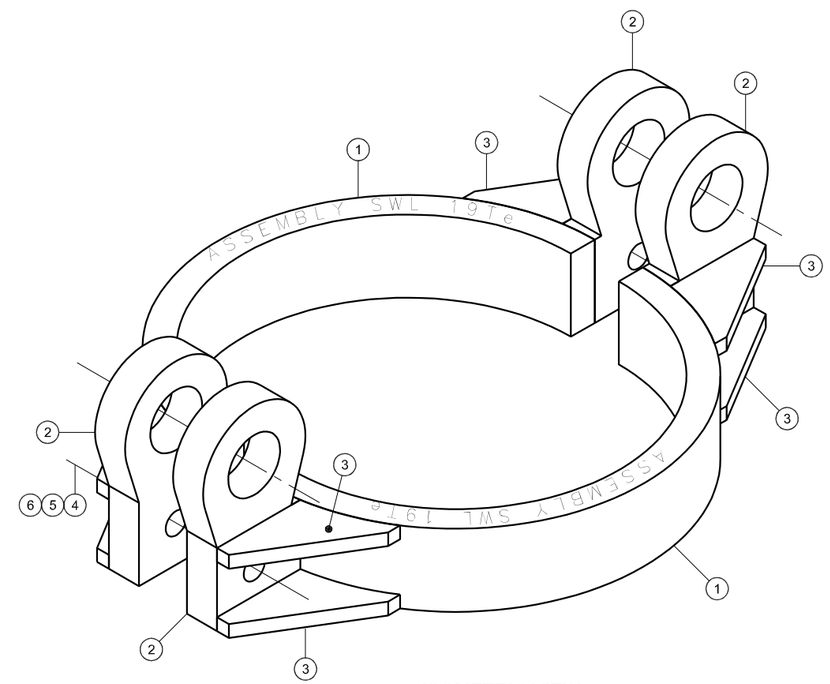

ISOMETRIC VIEW

SCALE: AS-SHOWN

Information contained in this document is the work product of Technip USA, Inc. and embodies confidential and proprietary information of Technip USA, Inc. and/or its client. Use of this information is restricted in accordance with conditions specified by the contract between Technip USA, Inc. and its client. Technip USA, Inc. disclaims any and all liabilities for any changes or modifications to this document which are made by any person other than Technip USA, Inc.

CONFIDENTIALITY CATEGORY: C.2

REV	DATE	BY	DESCRIPTION	CHKD	ENG	APRVD
A	2 JULY 10	RIR	ISSUED FOR REVIEW AND COMMENTS	DBL	MCH	JPA

bp

Technip

TECHNIP USA, Inc.

BP MACONDO CDP PHASE II

19Te HANDLING COLLAR

DRAWN	CHECKED	ENGINEER	SCALE
RIR	DBL	MCH	1:2
DATE	DATE	DATE	SHEET
2 JULY 10	7 JULY 10	7 JULY 10	1 OF 1

CLIENT APPROVAL

TPUSA DRAWING NUMBER GS017698-000-DD-5313-0012

DRAWING NUMBER CDP-39-GE-DG-0086

REV. A

PLOT: 7/7/2010 5:20 PM BY: IRAWAN RUDI LAST SAVE: 7/7/2010 5:20 PM FILE NAME: R:\PROJECTS\GS017455_CDP\GS017698_CDP PHASE II\SUBSEA\5313_LIFTING AND HANDLINE AIDS\GS017698-000-DD-5313-0012-A.DWG

TECHNIP USA, INC. TBPE FIRM REG. NO. F-3030

BILL OF MATERIAL

ITEM	QTY.	DESCRIPTION	MATERIAL	REMARKS
1	1	VERTEBRAE ADAPTER (2-PIECE)	AISI 4130 75K	-
2	8	3/4" X 2 1/2" CAP SCREW	-	-
3	2	1/8" SPACER PLATES	AISI 4130 75K	-

Approximate Weight = 538 lbs

BILL OF MATERIAL ABOVE IS FOR INFORMATION ONLY AND IS NOT TO BE USED AS A CUTTING LIST.

NOTES:

1. ALL DIMENSIONS ARE IN INCHES U.N.O.
2. DO NOT SCALE DRAWING.
4. REMOVE ALL BURRS, SHARP EDGES.
5. GENERAL FABRICATION TOLERANCES: LINEAR: ±0.08"
   ANGULAR: ±1°
6. FINISH: BLASTED AND UNDERCOAT WITH PRIMER.
   TOP COAT OIL BASED WHITE GLOSS.
7. REQUIRED BOLT TORQUE: 200ft.lbs.

ISOMETRIC VIEW

SCALE: N.T.S.

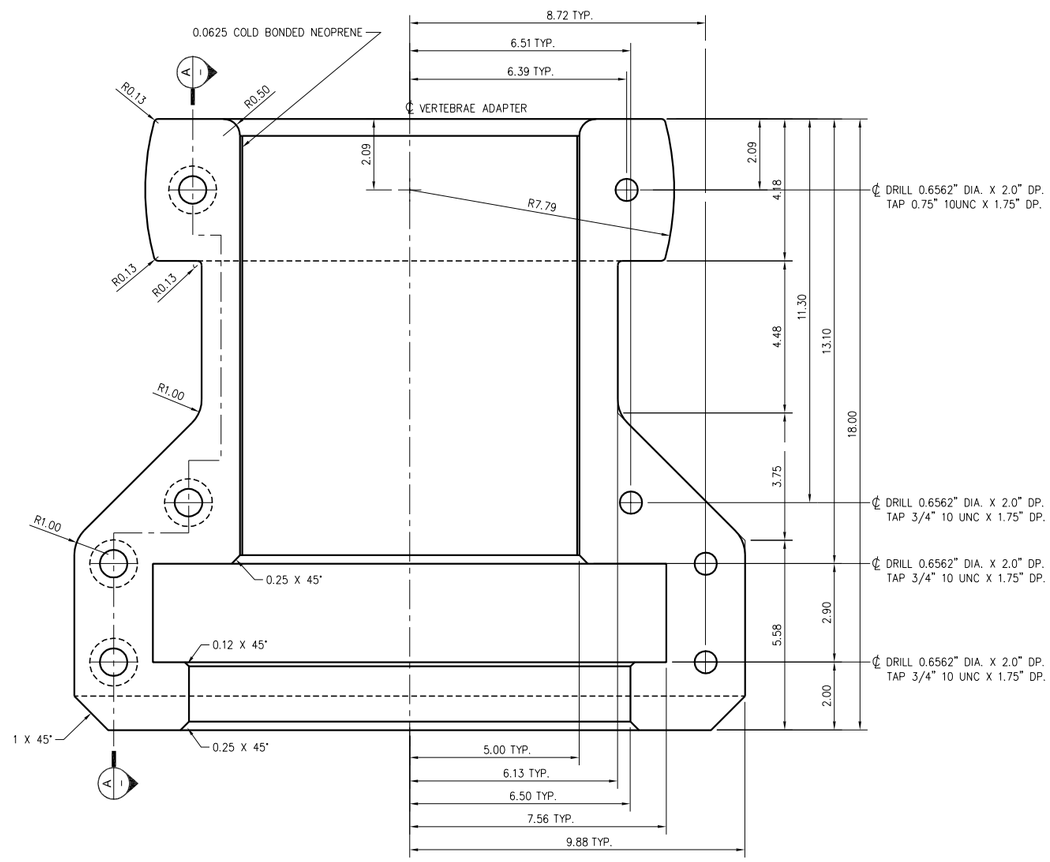

ELEVATION VIEW

SCALE: 6"=1'-0"

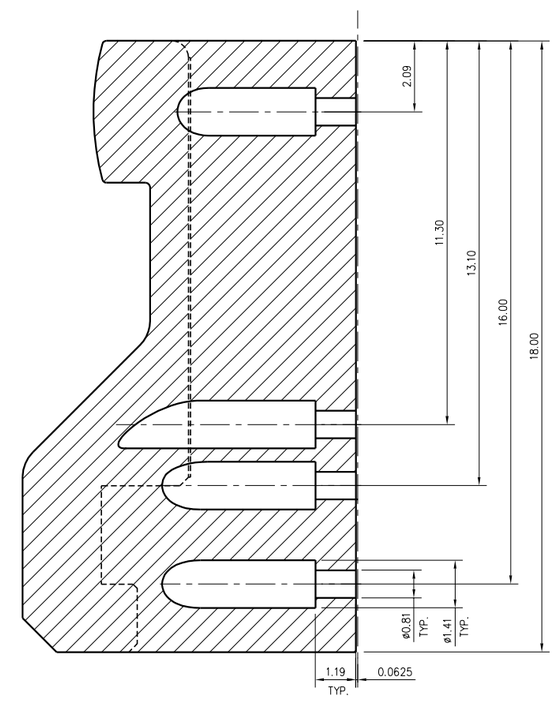

SECTION A

SCALE: 6"=1'-0"

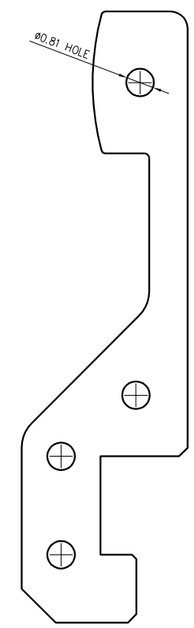

NOTE: MATCH CROSS SECTION, INCLUDING HOLE CENTERS, ON VERTEBRAE ADAPTER

1/8" SPACER FOR SAW CUT GAP

SCALE: 6"=1'-0"

2 REQ'D

NOTES:

1. REQUIRED BOLT TORQUE: 200ft.lbs.

Information contained in this document is the work product of Technip USA, Inc. and embodies confidential and proprietary information of Technip USA, Inc. and/or its client. Use of this information is restricted in accordance with conditions specified by the contract between Technip USA, Inc. and its client. Technip USA, Inc. disclaims any and all liabilities for any changes or modifications to this document which are made by any person other than Technip USA, Inc.

CONFIDENTIALITY CATEGORY: C.2

REV	DATE	BY	DESCRIPTION	CHKD	ENG	APRVD
0	2 JULY 10	RIR	ISSUED FOR CONSTRUCTION	CMC	TST	JPA
A	11-JUNE-10	DMY	ISSUED FOR REVIEW AND COMMENTS	RIR	TST	JPA

bp

Technip

TECHNIP USA, Inc.

DRAWN	CHECKED	ENGINEER	SCALE
DMY	RIR	TST	AS NOTED
DATE	DATE	DATE	SHEET
11-JUNE-10	24-JUNE-10	24-JUNE-10	1 OF 1

CLIENT APPROVAL

BP MACONDO CDP PHASE II

FRICTION CLAMP
VERTEBRAE ADAPTER DETAILS

TPUSA DRAWING NUMBER: GS017455-000-DD-5211-0005

DRAWING NUMBER: CDP-39-GE-DG-0078

REV. 0

PLOT: 7/2/2010 12:28 PM BY: IRAWAN RUDI LAST SAVE: 7/2/2010 12:28 PM FILE NAME: R:\PROJECTS\GS017455_CDP\SUBSEA\5211_FORGED_FITTINGS\GS017455-000-DD-5211-0005-0.DWG

TECHNIP USA, INC. TBPE FIRM REG. NO. F-3030

THIS DESIGN AND PRINT IS COPYRIGHT AND IS THE PROPERTY OF 2H Offshore inc. IT MUST NOT BE COPIED OR PERMITTED TO BE COPIED NOR MUST ITS CONTENTS BE DIVULGED TO ANY THIRD PARTY WITHOUT PRIOR WRITTEN PERMISSION. ITS ACCEPTANCE FOR THE PURPOSES OF INFORMATION AND/OR QUOTATION SHALL IMPLY AN AGREEMENT ON THE PART OF THE RECIPIENT NOT TO USE IT FOR ANY OTHER PURPOSE AND TO OBSERVE THE FORGOING CONDITIONS. THIS PRINT MUST BE RETURNED WHEN NO LONGER REQUIRED FOR THE PURPOSE FOR WHICH IT WAS SUPPLIED.

LIMITS UNLESS OTHERWISE STATED TO EN 22767-1

LINEAR TOL:							
OVER	0	0.236	1.181	4.724	15.748	39.37	78.74
UP TO	0.236	1.181	4.724	15.748	39.37	78.74	-
TOL:	±0.003	±0.007	±0.011	±0.019	±0.031	±0.047	±0.078

ANGULAR TOL: (SHORT SIDE OF ANGLE)					
OVER	0	10	50	120	360
UP TO	10	50	120	360	-
TOL:	±0.1°	±0°30'	±0°20'	±0°10'	±0°05'

1. REMOVE ALL SHARP EDGES & BURRS
2. A RADIUS OR CHAMFER OF 0.01 MAX IS PERMITTED IN CORNERS OF BLIND HOLES RECESSES & STEPS

SURFACE FINISH SYMBOLS TO BS.308 PT.2 — 63 TURNING, 125 MILLING

NOTES:
1. MATERIAL: LUGS & PADEYES 50 KSI SMYS
2. ESTIMATED WEIGHT IN AIR: 2200 LBS

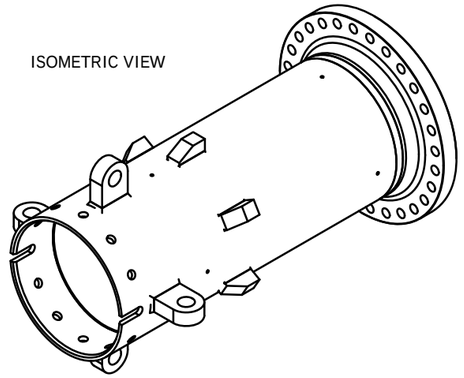

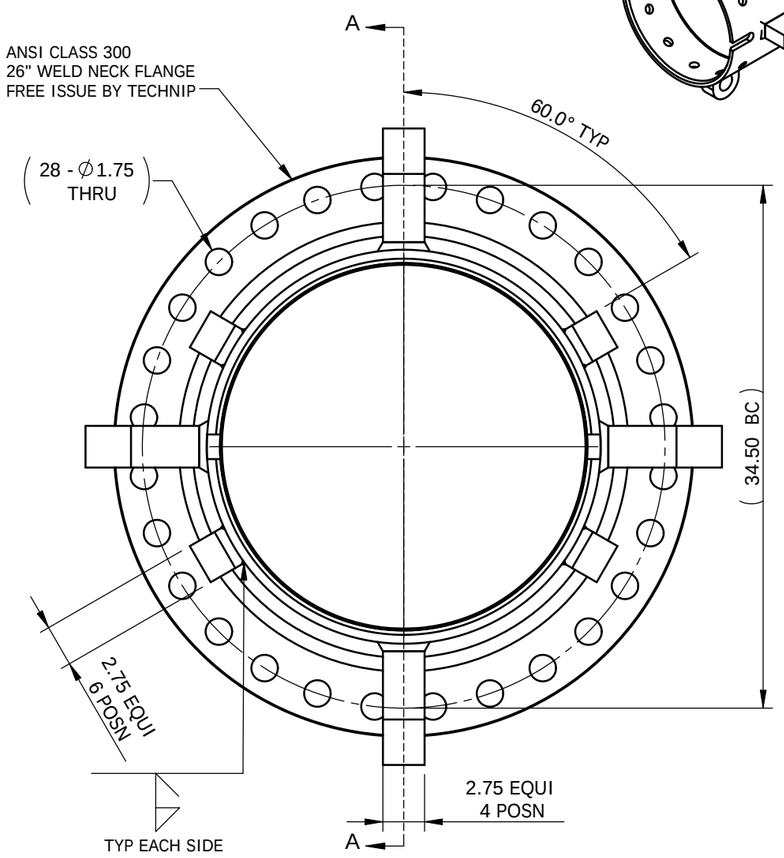

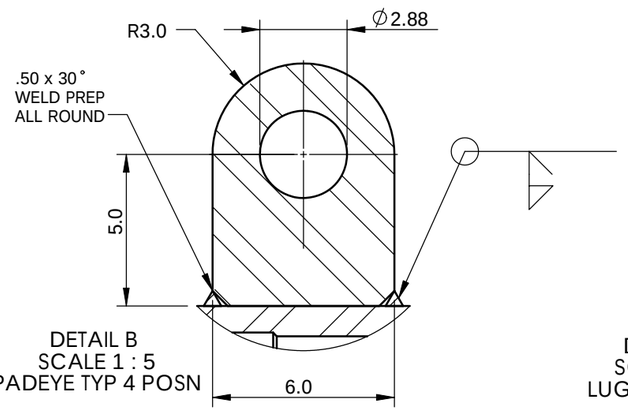

DETAIL B
SCALE 1 : 5
PADEYE TYP 4 POSN

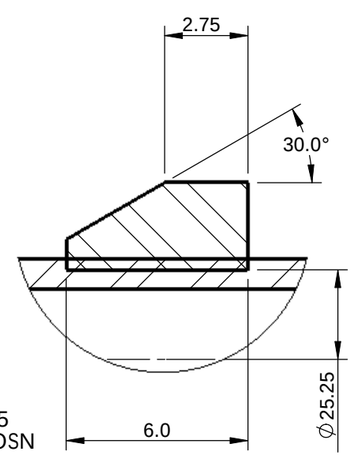

DETAIL C
SCALE 1 : 5
LUG TYP 6 POSN

SECTION A-A

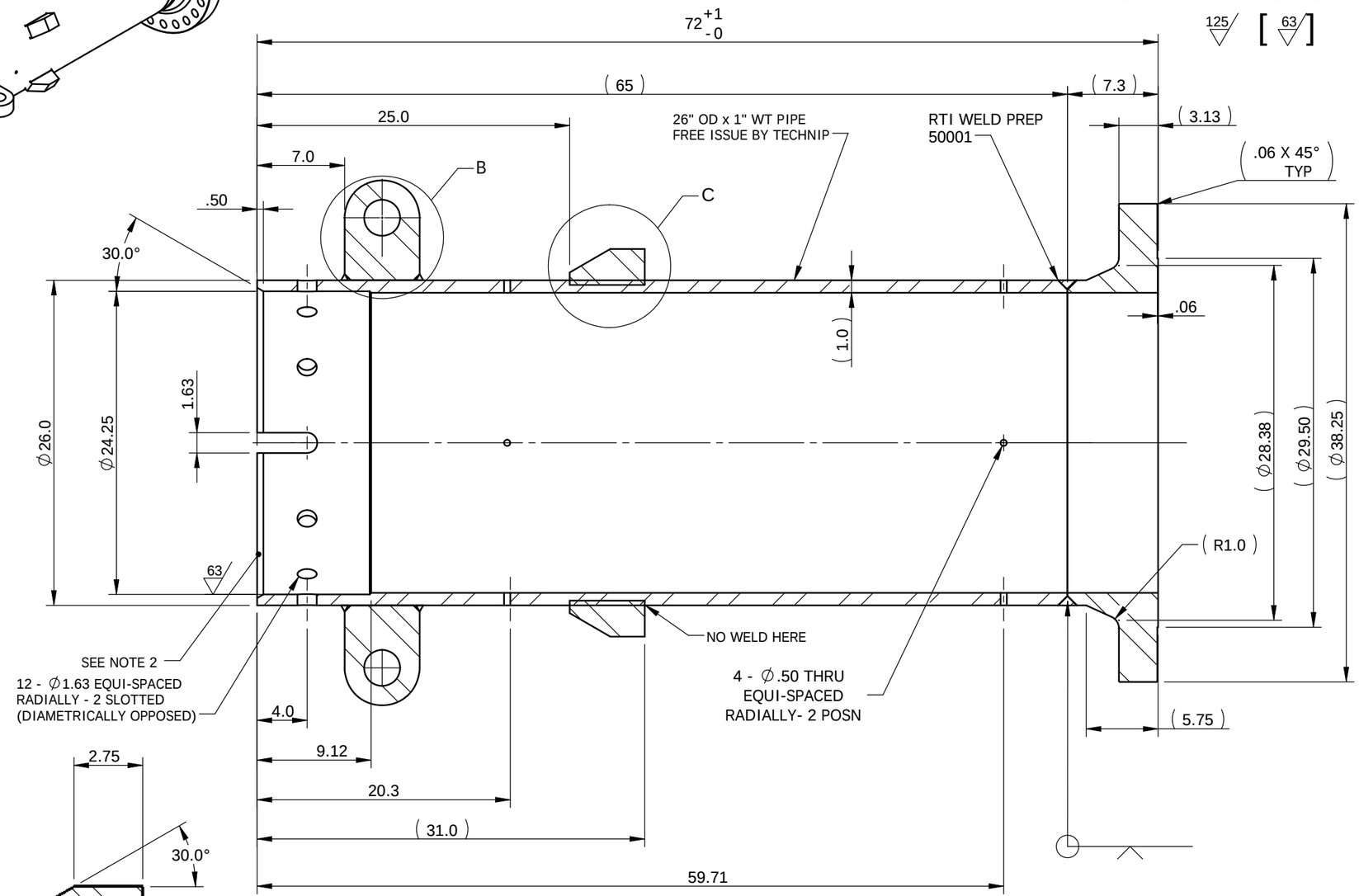

REV	DATE	DESCRIPTION	DRN	CHKD	APPRVD	CLIENT APPRVD
1	06.18.10	ISSUED FOR CONSTRUCTION	PC	RH	RT	-

2H offshore
16010 BARKER POINT LANE
SUITE 120
HOUSTON, TX - 77079
TEL: (1) 281 258 2000
FAX: (1) 281 258 2099

PROJECT: MC252 CDP-2 RISER MODIFICATION

TITLE: UPPER RISER ASSY BEND STIFFENER ADAPTER

3RD ANGLE PROJECTION — DIMENSIONS ARE IN inches UNLESS OTHERWISE STATED

ACCORDANCE WITH ASME Y14.5M-1994 — SCALE: 1:10 — REV: 1 — SHT 1 OF 1

DRG. No. 3837-DDL-3701-1

B

File Reference: Z:\Proj\3837 – BP CDP 2 FSR Engineering\Drawings\SW3D\

THIS DESIGN AND PRINT IS COPYRIGHT AND IS THE PROPERTY OF 2H Offshore Ltd. IT MUST NOT BE COPIED OR PERMITTED TO BE COPIED NOR MUST ITS CONTENTS BE DIVULGED TO ANY THIRD PARTY WITHOUT PRIOR WRITTEN PERMISSION. ITS ACCEPTANCE FOR THE PURPOSES OF INFORMATION AND/OR QUOTATION SHALL IMPLY AN AGREEMENT ON THE PART OF THE RECIPIENT NOT TO USE IT FOR ANY OTHER PURPOSE AND TO OBSERVE THE FORGOING CONDITIONS. THIS PRINT MUST BE RETURNED WHEN NO LONGER REQUIRED FOR THE PURPOSE FOR WHICH IT WAS SUPPLIED.

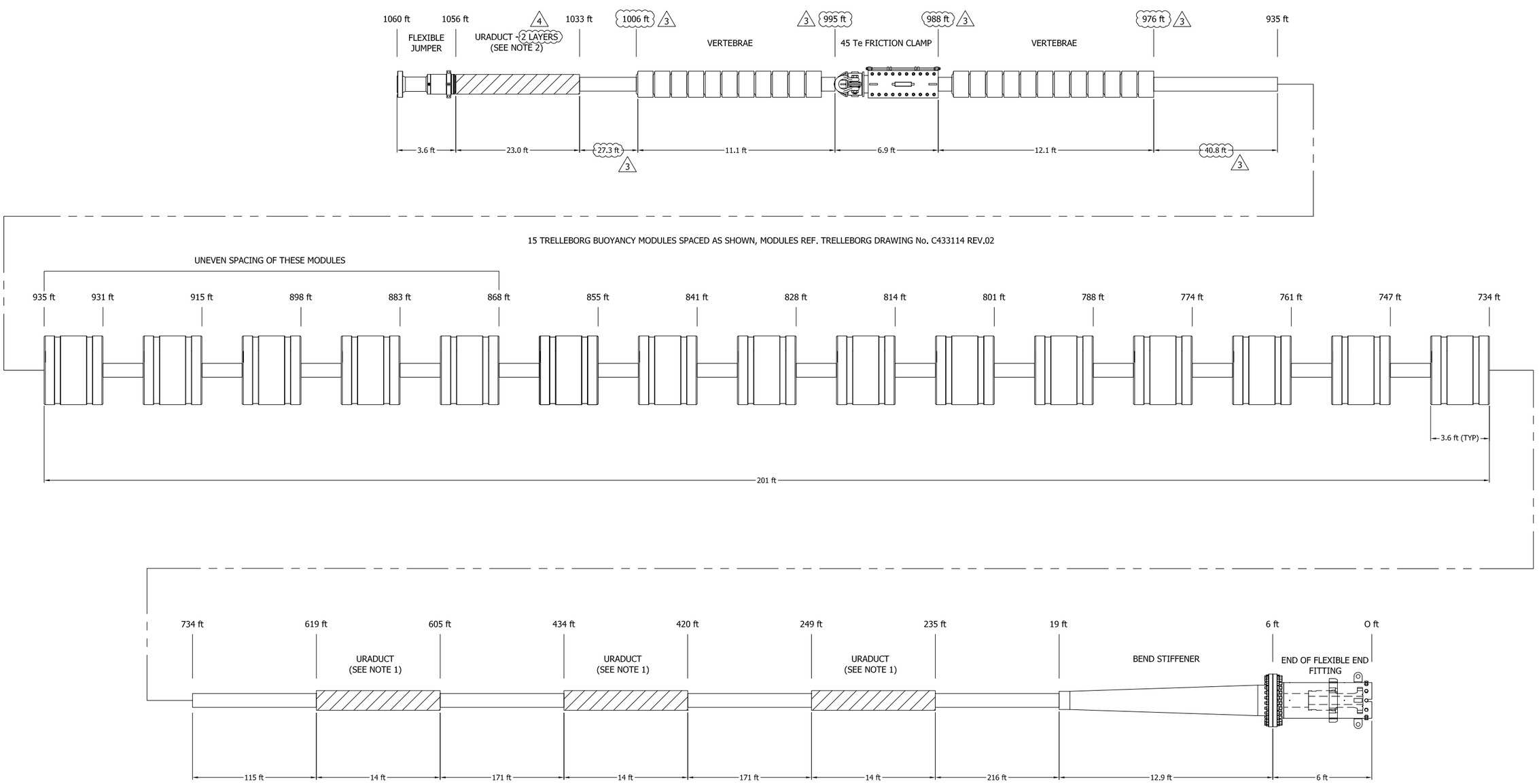

NOTES:

1. POSITIONED ON FLEXIBLE JUMPER WHERE STANDBY CLAMPS WILL HOLD FLEXIBLE WHEN DISCONNECTED.
2. POSITIONED ON FLEXIBLE TO PROTECT FLEXIBLE ON CHUTE AND ALSO LOCATION WHERE STANDBY CLAMP WILL HOLD FLEXIBLE WHEN DISCONNECTED. TWO (2) LAYERS OF URADUCT SHALL BE INSTALLED AT THIS LOCATION (4)

REV	DATE	DESCRIPTION	DRN	CHKD	APPRVD	CLIENT APPRVD
4	07.13.10	ISSUED FOR INFORMATION	TD	KK	PP	--
3	07.12.10	ISSUED FOR INFORMATION	TD	PP	PP	--
2	07.07.10	ISSUED FOR INFORMATION	PJC	DG	PP	--
1	07.01.10	ISSUED FOR INFORMATION	PJC	SL	PP	--

2H offshore
16010 BARKERS POINT LANE
SUITE 120
HOUSTON, TEXAS - 77079
TEL: (1) 281 258 2000
FAX: (1) 281 258 2099

bp

PROJECT: MC25-2 RISER MODIFICATION

TITLE: FLEXIBLE JUMPER LAYOUT

3RD ANGLE PROJECTION

DIMENSIONS ARE IN Inches UNLESS OTHERWISE STATED

ACCORDANCE WITH ASME Y14.5M-1994

SCALE: NTS

REV: 4

SHT 1 OF 1

2H DRAWING NO. 3837-DGA-0008

BP DRAWING NO. CDP-43-RI-DG-0088

B

NOTE:

1. WEIGHTS FOR THE FOLLOWING:
   ASSEMBLY IN AIR: 1186.5 LB [538 kg]
   ASSEMBLY IN SEAWATER: 282 LB [127.8 kg]
   VBR SEGMENT IN AIR: 81.8 LB [37.1 kg]
   VBR SEGMENT IN SEAWATER: 17.2 LB [7.8 kg]
2. TORQUE VBR SEGMENT HARDWARE TO 60 ± 5 FT-LB [81.3 ± 6.8 N-m]
3. STATIC BENDING MOMENT ALLOWABLE: TBD
   ULTIMATE BENDING MOMENT ALLOWABLE: TBD
4. ASSEMBLY TO BE BOXED AND MARKED SEPERATELY,
   MARK P/N AND REV IN FOLLOWING LOCATION.
   SERIALIZE INDIVIDUAL VBR'S AND MARK IN THE FOLLOWING LOCATION.
   MATERIAL LOT INFORMATION (INCLUDING LOT CHARACTERISTICS) FOR
   ASSEMBLY SUBCOMPONENTS WILL BE TIED TO THE SERIAL NUMBER
   ISSUED AND AVAILABLE UPON REQUEST.
5. LINEAR (LAYBARGE) LENGTH = 139 IN [3.54 m]
6. INTERFACES TO TECHNIP 6" FLEXIBLE END FITTING.
7. THIS VBR IS MARKED "END"; IF YOU CANNOT INSTALL THE VBR'S
   MAKE SURE YOU HAVE THE CORRECT VBR (BOTH HALVES MARKED
   "END").

ITEM NO.	PART NUMBER	DESCRIPTION	QTY.
1	W1005902	TECHNIP (BP) MACONDO 6" FLEXIBLE INTERFACE ADAPTOR	1
2	W10060302	SPECIAL VBR FOR TECHNIP END FITTING 9.8" ID 83" LOR VBR	1
3	98608366VB	WPC 9.8" ID 83" LOR VBR	13
4	PL W100460755/A	HARDWARE KIT, WPC 9" ID VBR, 316 SS	14

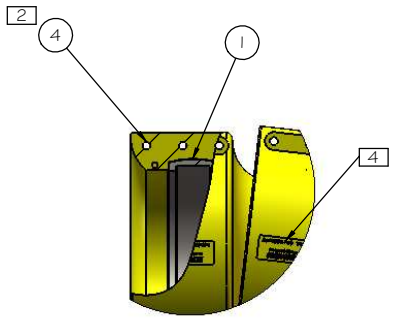

DETAIL A
SCALE 1 : 16

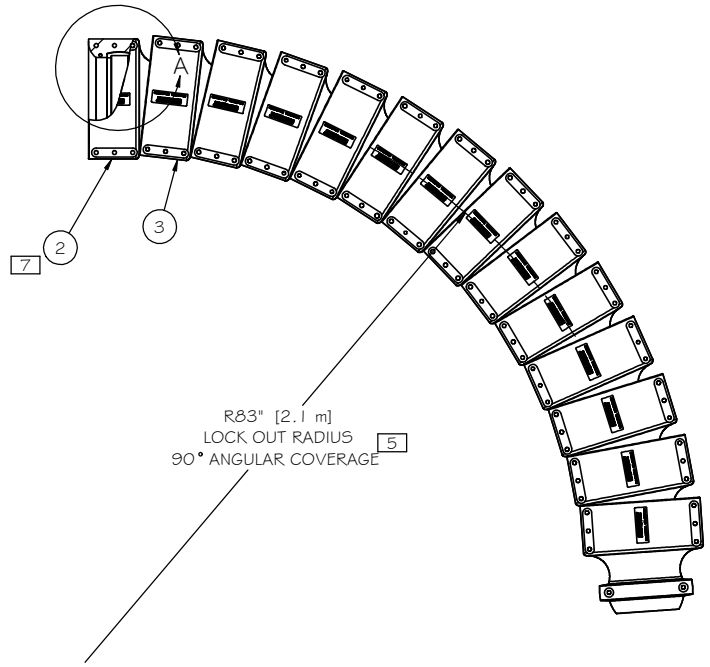

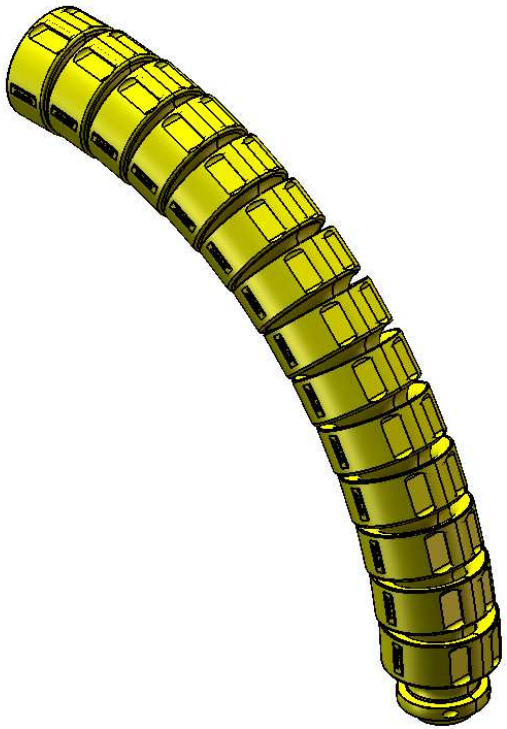

REV.	DESCRIPTION	DATE	ECN
A	RELEASED FOR PRODUCTION	6/7/10	N/A

PROPRIETARY INFORMATION

DO NOT COPY THIS FILE OR REPRODUCE THIS PART WITHOUT THE EXPRESS WRITTEN CONSENT OF WHITEFIELD PLASTICS. CRIMINAL ACTIONS WILL BE PROSECUTED.

UNLESS OTHERWISE NOTED, ALL DIMENSIONS IN INCHES.

PROPRIETARY AND CONFIDENTIAL.
ENTIRE CONTENTS COPYRIGHT (C) WHITEFIELD PLASTICS CORP. 2010.
ALL RIGHTS RESERVED.

DIMENSIONAL TOLERANCE			
METAL		ELASTOMER	
X.XXX	±0.005	X.XXX	±0.03
X.XX	±0.01	X.XX	±0.06
X.X	±0.03	X.X	±0.12
ANGLE	±0.50°	ANGLE	±0.50°
SURF. RMS	125	SURF. RMS	63

	NAME	DATE
DESIGNED	BGS	6/8/10
DRAWN	BGS	6/8/10
CHECKED	BGS	6/8/10
APPROVED	BGS	6/8/10

MATERIAL:	HARDNESS:	FINISH:	COLOR:	WEIGHT:
N/A	N/A	N/A	YELLOW	1
CASTING P/N:	MOLD P/N:	CUSTOMER P/N:	BOM NUMBER:	SCALE:
N/A	N/A	N/A	N/A	1:32

Designing and Molding Custom Urethane Products since 1961
Whitefield Plastics

TECHNIP (BP) MACONDO
9.8" ID 83" LOR
VBR GA

SIZE	DWG. NO.	REV.	SHEET
A	W10052702	A	1 OF 1

NOTE:

1. PART SHALL BE SERIALIZED AT LOCATION SHOWN. MARK "END" HERE.
2. WEIGHT (AIR): 37.5 LB [17 kg]
   (SEA): 5.84 LB [2.65 kg]
   (S.G. SEAWATER = 1.03)
3. ALLOWABLE STATIC BENDING MOMENT: TBD FT-LB
   ULTIMATE BENDING MOMENT: TBD FT-LB
4. MAKE FROM P/N: 98608366VB.

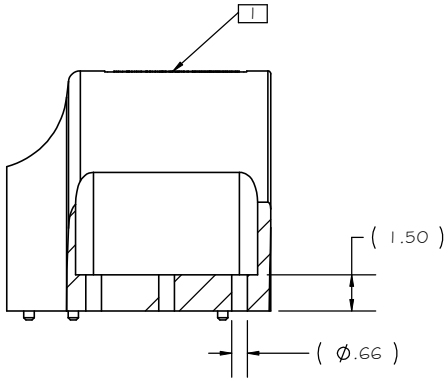

SECTION A-A

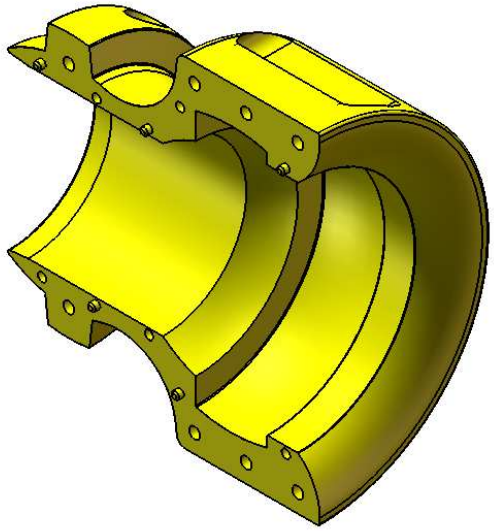

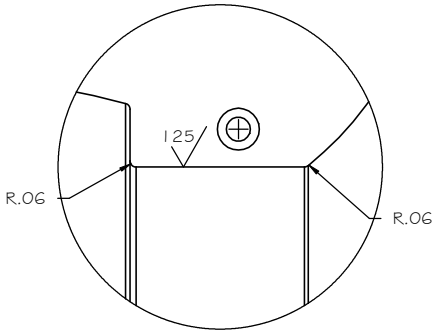

DETAIL B
SCALE 1 : 2

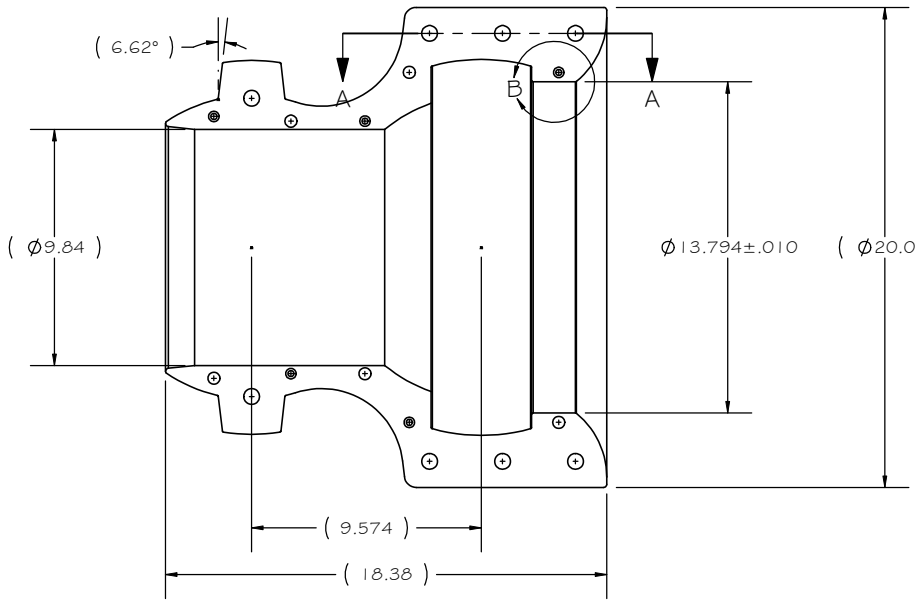

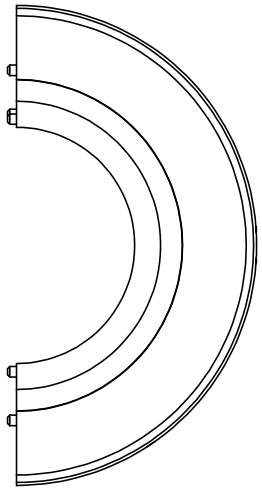

REV.	DESCRIPTION	DATE	ECN
A	RELEASED FOR PRODUCTION.	6/7/10	N/A

PROPRIETARY INFORMATION

DO NOT COPY THIS FILE OR REPRODUCE THIS PART WITHOUT THE EXPRESS WRITTEN CONSENT OF WHITEFIELD PLASTICS. CRIMINAL ACTIONS WILL BE PROSECUTED.

DIMENSIONAL TOLERANCE

METAL		ELASTOMER	
X.XXX	±0.005	X.XXX	±0.03
X.XX	±0.01	X.XX	±0.06
X.X	±0.03	X.X	±0.12
ANGLE	±0.50°	ANGLE	±0.50°
SURF. RMS	125	SURF. RMS	63

	NAME	DATE
DESIGNED	BGS	6/7/10
DRAWN	BGS	6/7/10
CHECKED	BGS	6/7/10
APPROVED	BGS	6/7/10

MATERIAL:	HARDNESS:	FINISH:	COLOR:	WEIGHT:
4	N/A	N/A	Y	2

CASTING P/N:	MOLD P/N:	CUSTOMER P/N:	BOM NUMBER:	SCALE:
N/A	N/A	N/A	N/A	1:8

UNLESS OTHERWISE NOTED, ALL DIMENSIONS IN INCHES.

PROPRIETARY AND CONFIDENTIAL.
ENTIRE CONTENTS COPYRIGHT (C) WHITEFIELD PLASTICS CORP. 2010.
ALL RIGHTS RESERVED.

Designing and Molding Custom Urethane Products since 1961

Whitefield Plastics

SPECIAL VBR FOR TECHNIP END FITTING 9.8" ID 83" LOR VBR

SIZE	DWG. NO.	REV.	SHEET
A	W10060302	A	1 OF 1

NOTE:

1. PART SHALL BE SERIALIZED AT LOCATION SHOWN.
2. PART SHALL BE STAMPED WITH 'P/N: W1005902 REV A' AT LOCATION SHOWN.
3. ORIGINAL MILL CERTS (CHEMISTRY AND LOT) ARE REQUIRED.
4. WEIGHT: 16 LB [7.28 kg]
5. INTERFACES TO TECHNIP DWG: GSxxx REV x.
6. DESIGN LIFE: 1 YEAR
7. BREAK ALL SHARP EDGES.

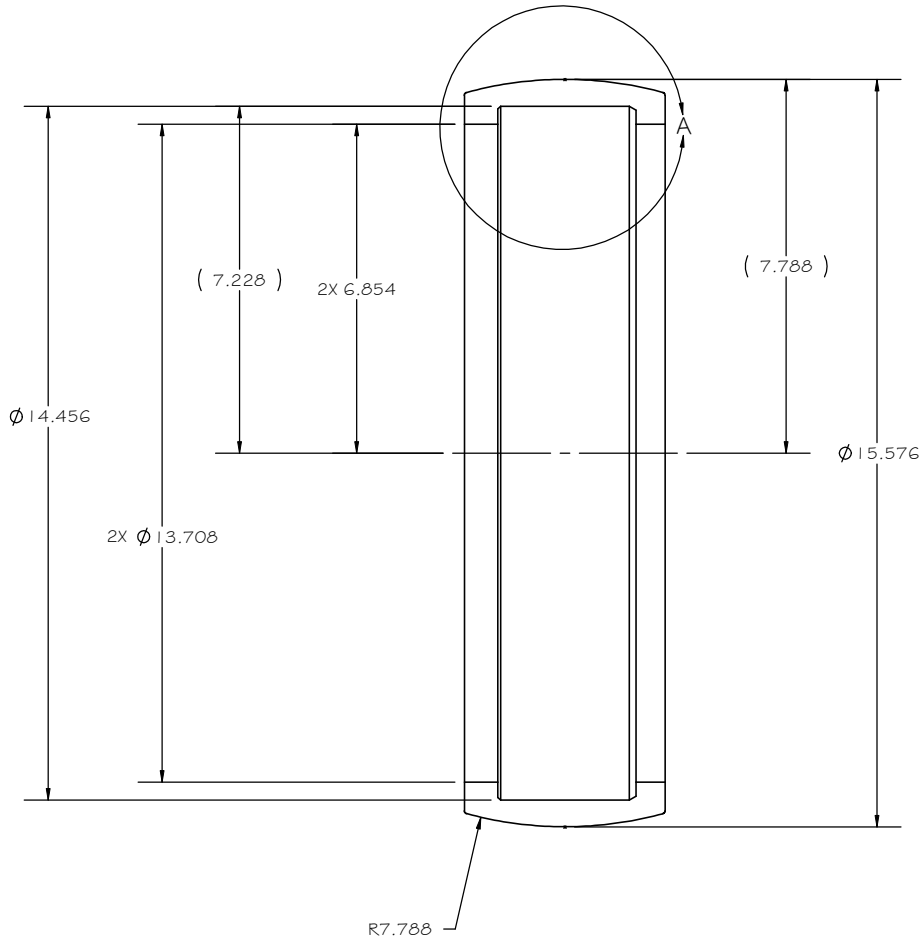

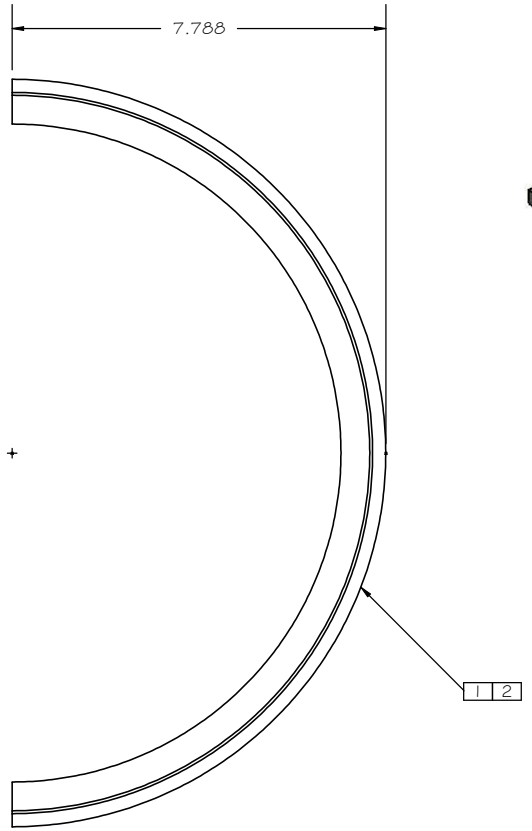

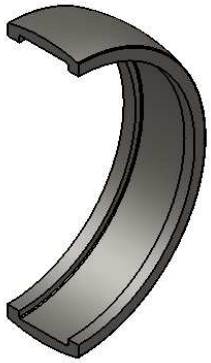

REV.	DESCRIPTION	DATE	ECN
A	RELEASED FOR PRODUCTION.	6/8/10	N/A

PROPRIETARY INFORMATION

DO NOT COPY THIS FILE OR REPRODUCE THIS PART WITHOUT THE EXPRESS WRITTEN CONSENT OF WHITEFIELD PLASTICS. CRIMINAL ACTIONS WILL BE PROSECUTED.

DIMENSIONAL TOLERANCE

METAL		ELASTOMER	
X.XXX	±0.005	X.XXX	±0.03
X.XX	±0.01	X.XX	±0.06
X.X	±0.03	X.X	±0.12
ANGLE	±0.50°	ANGLE	±0.50°
SURF. RMS	125	SURF. RMS	63

	NAME	DATE
DESIGNED	BGS	5/30/10
DRAWN	BGS	5/30/10
CHECKED	BGS	6/8/10
APPROVED	BGS	6/8/10

MATERIAL:	HARDNESS:	FINISH:	COLOR:	WEIGHT:
4130	50 KSI MIN	125 Ra	N/A	4

CASTING P/N:	MOLD P/N:	CUSTOMER P/N:	BOM NUMBER:	SCALE:
N/A	N/A	SEE NOTES	N/A	1:8

UNLESS OTHERWISE NOTED, ALL DIMENSIONS IN INCHES.

PROPRIETARY AND CONFIDENTIAL.
ENTIRE CONTENTS COPYRIGHT (C) WHITEFIELD PLASTICS CORP. 2010.
ALL RIGHTS RESERVED.

Designing and Molding Custom Urethane Products since 1961

Whitefield Plastics

TECHNIP (BP) MACONDO
6" FLEXIBLE
INTERFACE ADAPTOR

SIZE	DWG. NO.	REV.	SHEET
A	W1005902	A	1 OF 2

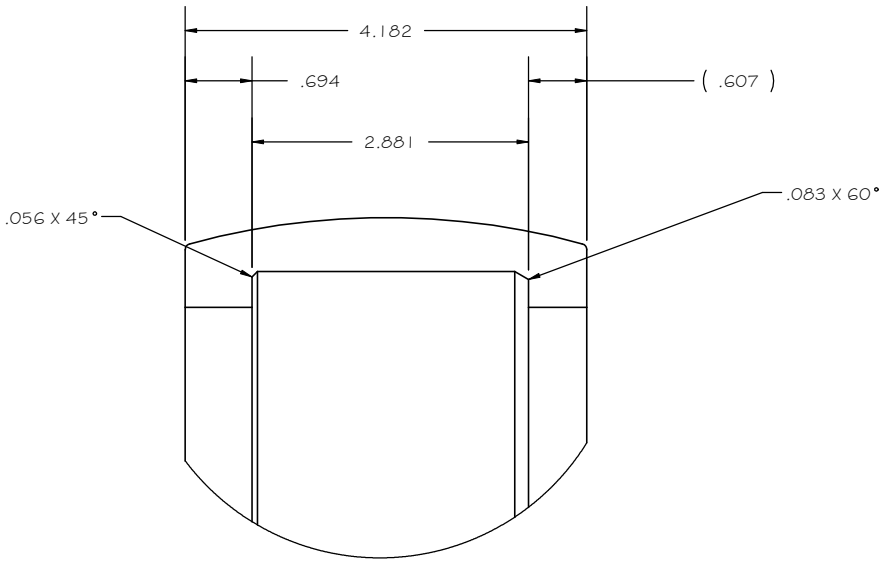

DETAIL A
SCALE 1 : 2

Designing and Molding Custom Urethane Products since 1961
Whitefield Plastics

TECHNIP (BP) MACONDO
6" FLEXIBLE
INTERFACE ADAPTOR

SIZE	DWG. NO.	REV.	SHEET
A	W1005902	A	2 OF 2

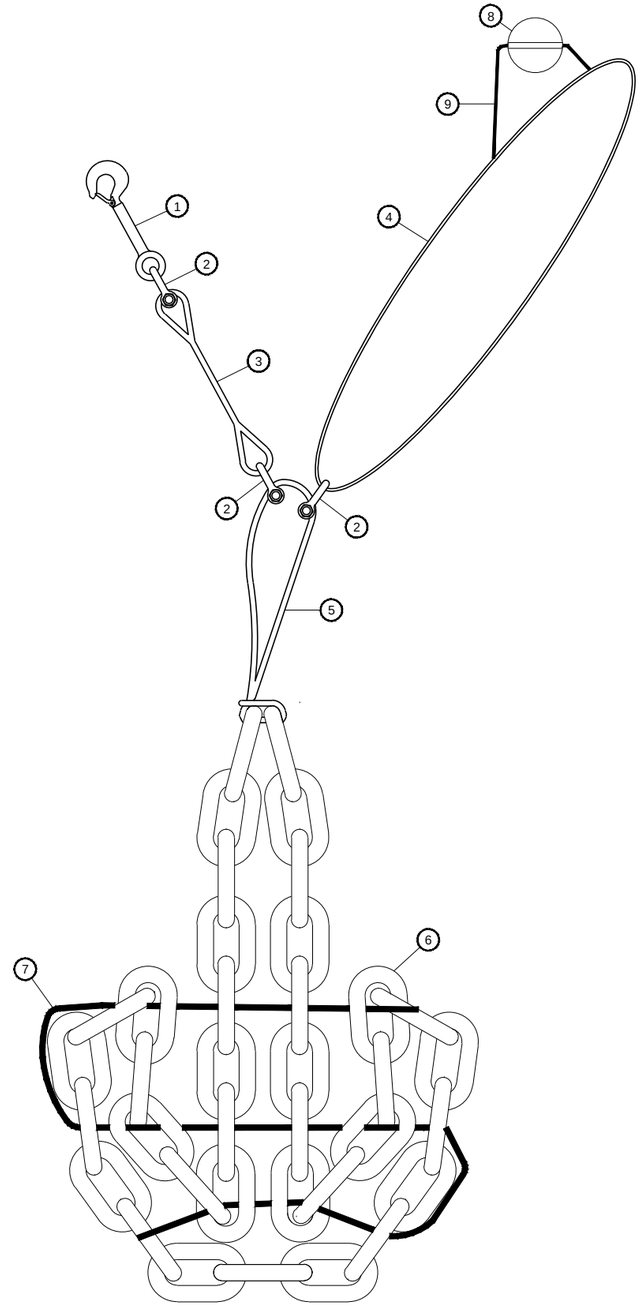

CLUMPWEIGHT RIGGING

SCALE: 1" = 1'-0"

RIGGING DETAILS-MATERIAL TAKE-OFF TABLE

IDENT	QTY	DESCRIPTION	LENGTH ft.	MBL (Te)	SWL (Te)	UNIT WT. (Te)	TOTAL WT. (Te)	EYE DETAILS TOP EYE	EYE DETAILS BTM EYE
1	1	CROSBY LONG SHANK ROV HOOK	–	–	11.5	–	–	–	–
2	3	CROSBY G-2130 SHACKLE	–	–	12	–	–	–	–
3	1	ø1" WIRE ROPE SLING	3	–	11.5	–	–	SOFT	SOFT
4	1	ø1" WIRE ROPE	8	–	10	–	–	–	–
5	1	ø1" WIRE GROMMET	6	–	11.5	–	–	–	–
6	1	ø4" CHAIN	–	–	–	–	5	–	–
7	1	ø1" WIRE ROPE SLING	20	–	11.5	–	–	SOFT	SOFT
8	1	10kg FLOAT	–	–	–	–	–	–	–
9	1	ø1/2" POLY PROP ROPE	5	–	8	–	–	–	–

OVERALL LOAD DATA

ITEM	DESCRIPTION	MASS
1	MASS OF LOAD	3Te
2	MASS OF CONTENTS/FILL	–
3	MASS OF RIGGING	–
4	DESIGN TRIM	–

PROJECT SPECIFIC REFERENCE DRAWINGS

1 Te=1 tonne= 1000 kg (MASS)

NO.	REFERENCE DRAWING TITLE	REF. DWG. NO.	REV	DATE	BY	DC	ENG	CE	PM	CLIENT	DESCRIPTION
			0								APPROVED FOR CONSTRUCTION

DRAWN BY: S. Johnson — DATE: 29 SEPT 10
ENGINEER — DATE
PROJECT ENGINEERING MANAGER — DATE
SCALE AT 'D'-SIZE: AS SHOWN

DWG. TITLE:
MACONDO DECONSTRUCTION PROJECT
RIGGING SPECIFICATION SUMMARY
1060 FT. FLEXIBLE WET PARK
CLUMPWEIGHT

CLIENT: bp

CAD No.: -
JOB No.: -
DWG No.: MDP-38-HI-DG-0072
REV.: 0

OVERALL LIFT RIGGING ARRANGEMENT

CALCULATED MAXIMUM MASS = - Te

RIGGING DETAILS - MATERIAL TAKE OFF TABLE

IDENT	QTY	DESCRIPTION	LENGTH ft.	MBL (Te)	SWL (Te)	COMMENT	UNIT WT. (lbs.)	TOTAL WT. (lbs.)	EYE DETAILS TOP EYE	EYE DETAILS BTM EYE
1	2	CROSBY 55Te G-2130 SHACKLE	0.875'	–	55	– –	98.25	196.50	–	–
2	2	TPXC 6000 TWIN PATH SLING	16.40'	–	–	SEE NOTE 1 –	–	–	–	–
3	1	2" MASTERLINK	1.16'	–	–	SEE NOTE 1 –	37.04	37.04	–	–
4	2	CROSBY 25Te G-2130 SHACKLE	0.58'	–	25	– –	33.91	67.82	–	–
5	1	CROSBY 125Te G-2160 WIDEBODY SHACKLE	1.19'	–	125	– –	161	161	–	–
6	1	2" x 3m SYN. AMSTEEL BLUE GROMMET WITH CHAFE GUARD	9.84'	–	50	– –	–	–	–	–
7	1	2" x 12m SYN. AMSTEEL BLUE GROMMET WITH CHAFE GUARD	39.37'	–	50	– –	–	–	–	–

1 REVISED ITEM 4

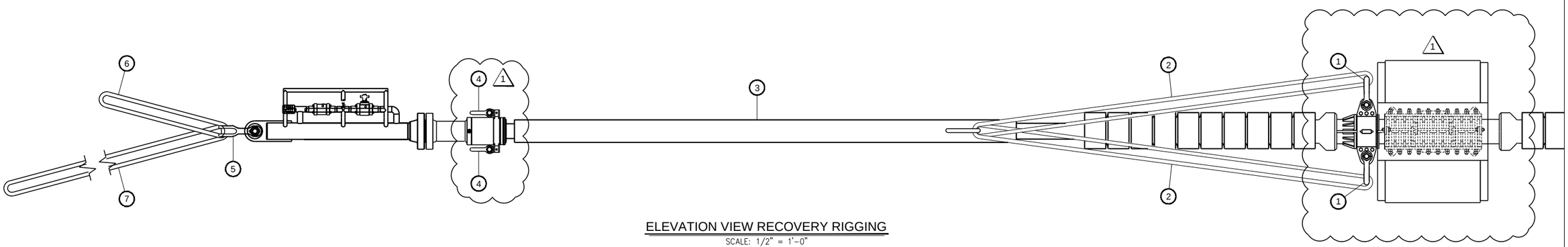

ELEVATION VIEW RECOVERY RIGGING

SCALE: 1/2" = 1'-0"

STANDARD REFERENCE DRAWINGS

PROJECT SPECIFIC NOTES

1. ITEMS No. 2 & 3 ARE MADE IN A BRIDLE CONFIGURATION, SWL = 47.17Te

OVERALL LOAD DATA

ITEM	DESCRIPTION	MASS
1	MASS OF LOAD	– Te
2	MASS OF CONTENTS/FILL	– Te
3	MASS OF RIGGING	– Te
4	DESIGN TRIM	LEVEL

PROJECT SPECIFIC REFERENCE DRAWINGS

1 Te = 1 tonne = 1000 kg (MASS)

NO.	REFERENCE DRAWING TITLE	REF. DWG. NO.	REV	DATE	BY	DC	ENG	CE	PM	CLIENT	DESCRIPTION
			1	07/08/10	SSJ	JV	TCA	GRE	DED	BP	REVISED AS SHOWN
			0	06/15/10	SSJ	JV	TCA	GRE	DED	BP	APPROVED FOR CONSTRUCTION

DRAWN BY	S.Johnson	DATE 06/14/10
ENGINEER	TCA	DATE 06/15/10
PROJECT ENGINEERING MANAGER	DED	DATE 06/15/10
SCALE AT 'D'-SIZE	1 1/2" = 1'-0"	

DWG. TITLE

CONTAINMENT AND DISPOSAL PROJECT RIGGING SPECIFICATION SUMMARY UPPER 6" FLEXIBLE RECOVERY RIGGING

CLIENT: bp

CAD No.

JOB No. -

DWG No. CDP-38-HI-DG-0015

REV. 1

OVERALL LIFT RIGGING ARRANGEMENT

CALCULATED MAXIMUM MASS = - Te

RIGGING DETAILS - MATERIAL TAKE OFF TABLE

IDENT	QTY	DESCRIPTION	LENGTH ft.	MBL (Te)	SWL (Te)	COMMENT	UNIT WT. (lbs.)	TOTAL WT. (lbs.)	EYE DETAILS TOP EYE	EYE DETAILS BTM EYE
1	1	ROVSCO 35Te SHACKLE	–	–	35	– –	–	–	–	–
2	1	CROSBY 55Te G-2160 WIDEBODY SHACKLE	0.78'	–	55	– –	71	71	–	–
3	1	2" x 3m SYN. AMSTEEL BLUE GROMMET WITH CHAFE GUARD	9.84'	–	50	– –	–	–	–	–
4	1	2" x 12m SYN. AMSTEEL BLUE GROMMET WITH CHAFE GUARD	39.37'	–	50	– –	–	–	–	–

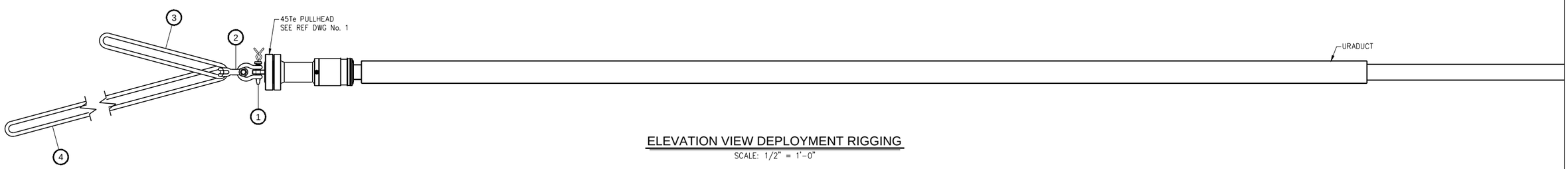

ELEVATION VIEW DEPLOYMENT RIGGING

SCALE: 1/2" = 1'-0"

STANDARD REFERENCE DRAWINGS

PROJECT SPECIFIC NOTES

PROJECT SPECIFIC REFERENCE DRAWINGS

OVERALL LOAD DATA

ITEM	DESCRIPTION	MASS
1	MASS OF LOAD	– Te
2	MASS OF CONTENTS/FILL	– Te
3	MASS OF RIGGING	– Te
4	DESIGN TRIM	LEVEL

1 Te = 1 tonne = 1000 kg (MASS)

NO.	REFERENCE DRAWING TITLE	REF. DWG. NO.	REV	DATE	BY	DC	ENG	CE	PM	CLIENT	DESCRIPTION
1	45Te PULLHEAD FABRICATION USING 7 1/16" 10K API BLIND FLANGE	CDP-39-GE-DG-0053	0		SSJ						APPROVED FOR CONSTRUCTION

DRAWN BY: S.Johnson — DATE: 23 AUG 10
ENGINEER — DATE
PROJECT ENGINEERING MANAGER — DATE
SCALE AT 'D'-SIZE: 1 1/2" = 1'-0"

DWG. TITLE: **MACONDO DECONSTRUCTION PROJECT RIGGING SPECIFICATION SUMMARY UPPER 6" FLEXIBLE JUMPER DEPLOYMENT RIGGING FROM HP1**

CLIENT: bp

CAD No.
JOB No. -
DWG No. MDP-38-HI-DG-0045
REV. 0

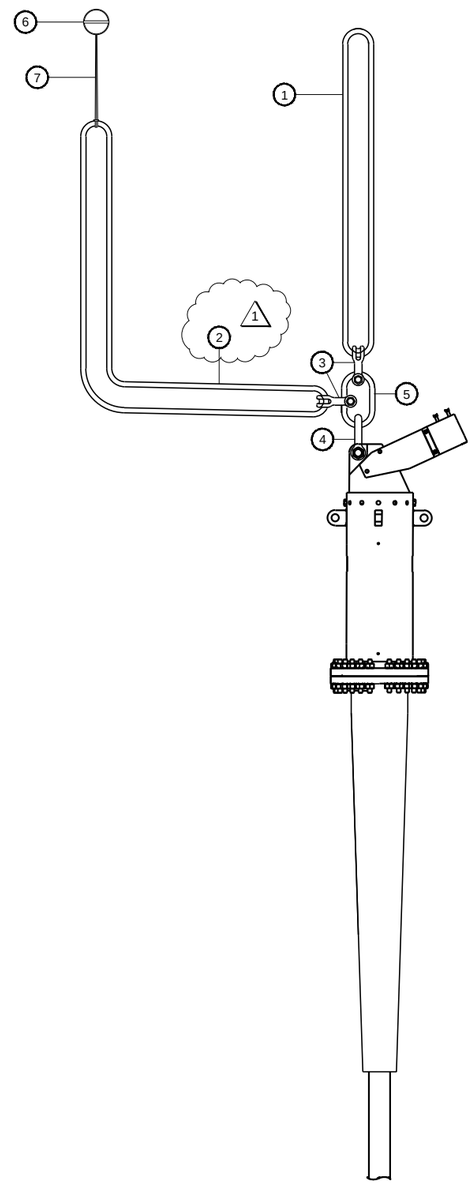

KICK-OFF SPOOL RIGGING

SCALE: 3/4" = 1'-0"

RIGGING DETAILS-MATERIAL TAKE-OFF TABLE

IDENT	QTY	DESCRIPTION	LENGTH ft.	MBL (Te)	SWL (Te)	UNIT WT. (Te)	TOTAL WT. (Te)	EYE DETAILS TOP EYE	EYE DETAILS BTM EYE
1	1	ø2 1/2" WIRE GROMMET	10	–	–	–	–	–	–
2	1	ø2" SYNTHETIC GROMMET	15	–	40	–	–	–	–
3	2	CROSBY G-2160 SHACKLE	–	–	55	–	–	–	–
4	1	CROSBY G-2130 SHACKLE	–	–	35	–	–	–	–
5	1	2 3/4" MASTER LINK	–	–	–	–	–	–	–
6	1	10kg BUOY	–	–	–	–	–	–	–
7	1	ø1/2" POLY ROPE (CHOKED)	6	–	–	–	–	–	–

OVERALL LOAD DATA

ITEM	DESCRIPTION	MASS
1	MASS OF SUCTION PILE	–
2	MASS OF CONTENTS/FILL	–
3	MASS OF RIGGING	–
4	DESIGN TRIM	–

PROJECT SPECIFIC REFERENCE DRAWINGS

1 Te=1 tonne= 1000 kg (MASS)

NO.	REFERENCE DRAWING TITLE	REF. DWG. NO.	REV	DATE	BY	DC	ENG	CE	PM	CLIENT	DESCRIPTION
			1		SSJ						REVISED AS SHOWN
			0								APPROVED FOR CONSTRUCTION

DRAWN BY: G.CARDONA — DATE: 4 OCT 10

ENGINEER — DATE

PROJECT ENGINEERING MANAGER — DATE

SCALE AT 'D'-SIZE: AS SHOWN

DWG. TITLE: **MACONDO DECONSTRUCTION PROJECT RIGGING SPECIFICATION SUMMARY WET PARK 1060' FLEXIBLE KICK-OFF SPOOL**

CLIENT: bp

CAD No.: -

JOB No.: -

DWG No.: MDP-38-HI-DG-0077

REV.: 1

Item	Qty	Description	Reference	Item	Qty	Description	Reference
1	1060ft.	FLEXIBLE RISER STRUCTURE 6"	152.61433	12	4 + 1SP	SHACKLE 4.75Te SWL	–
2	1	END FITTING FIXED FLANGE, 7 1/16" 10,000psi API FLG. W/BX-156	EM 152 61433 03	13	5	LOAD HUGGER 1600lbs.	–
3	1	TRELLEBORG BENDING STIFFENER	DWG. 8809 PART No. 1008485	14	2	SHACKLE, 55Te SWL	–
4	2	45Te PULLHEAD, 7 1/16" 10K API FLG.	GS017455-000-DD-5311-0001	15	8	POLYPLANK/FOAM BLOCKS	–
5	4+1SP	SHACKLE, 8.5Te SWL	–				
6	2	END FITTING / STIFFENER PROTECTION BUBBLE WRAP/FOAM/SHRINK WRAP	–				
7	8+1SP	PULL LIFT, SWL=3Te	–				
8	10+1SP	ENDLESS SOFT SLING, SWL=3Te, Lg.=3m	–				
9	1	9.2m REEL	–				
10	2 + 1SP	LASHING CHAIN ø13 LONG LINKS 5.3Te, 1.5m LONG	–				
11	4 + 1SP	ENDLESS SOFT SLING SWL 6Te, 18m LONG	–				

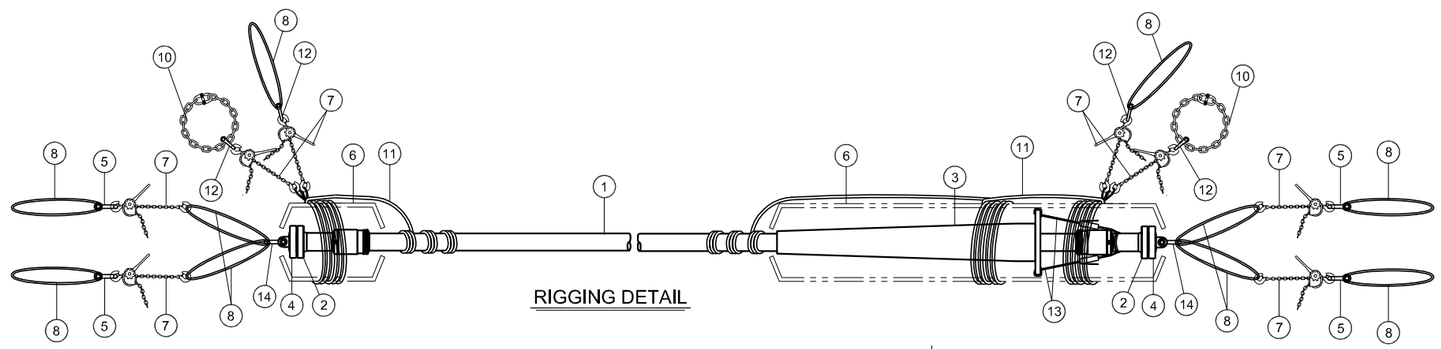

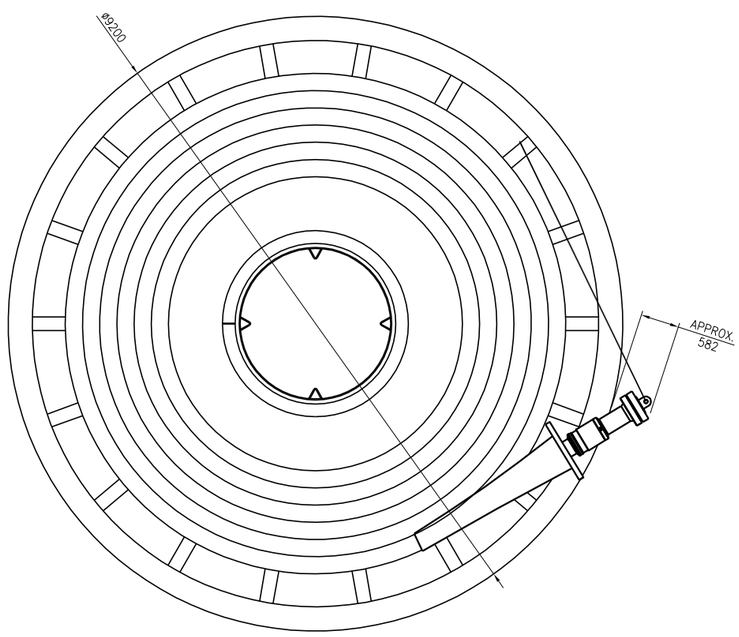

VIEW A

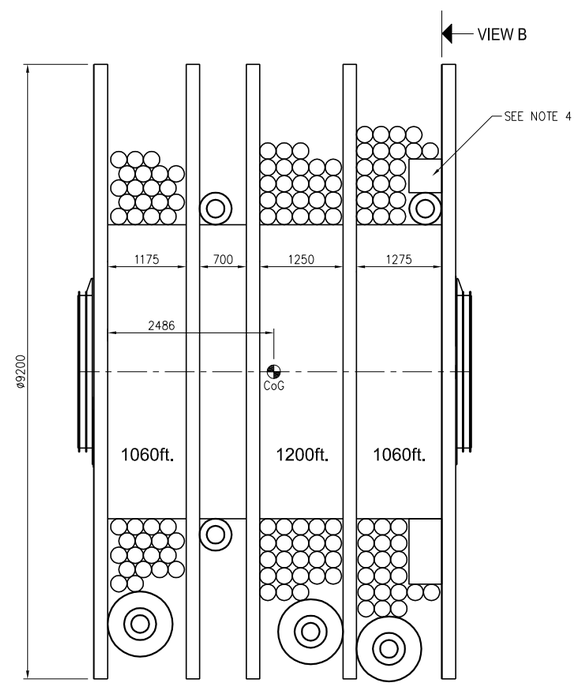

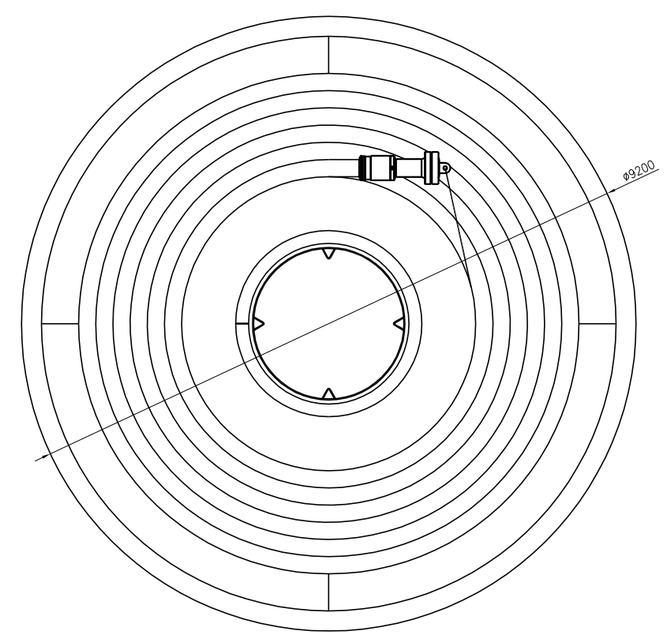

VIEW B

Est. Total Weight: 200Te

NOTE:
1. POLYPLANK TO BE USED WHEN PACKING BEND STIFFENER.
2. PACKING FOR TRANSPORTATION ONLY, NOT FOR INSTALLATION UNDER TENSION.
3. FLEXIBLE PIPE SPIRALS LAYOUT IS REPRESENTATIVE AND MAY VARY DURING ACTUAL PACKING OPERATION.
4. FOAM DIMENSIONS: W=630mm, H=490mm-980mm.

REFERENCE

GS018007-000-DW-5746-0020 FINAL PACKING FOR 1200ft. FLEXIBLE ON 92 REEL
GS018007-000-DW-5746-0022 FINAL PACKING FOR 1060ft. FLEXIBLE ON 92 REEL

Information contained in this document is the work product of Technip USA, Inc. and embodies confidential and proprietary information of Technip USA, Inc. and/or its client. Use of this information is restricted in accordance with conditions specified by the contract between Technip USA, Inc. and its client. Technip USA, Inc. disclaims any and all liabilities for any changes or modifications to this document which are made by any person other than Technip USA, Inc.

CONFIDENTIALITY CATEGORY: C.2

REV	DATE	BY	DESCRIPTION	CHKD	ENG	APRVD
A	5 OCT 10	RIR	ISSUED FOR REVIEW AND COMMENTS	DBL	MMU	EKE

bp

Technip
TECHNIP USA, Inc.

DRAWN	CHECKED	ENGINEER	SCALE
MGW	DBL	MMU	1:40
DATE	DATE	DATE	SHEET
24-SEP-10	5 OCT 10	5 OCT 10	1 OF 1

MACONDO DEMOBILIZATION PROJECT

FINAL PACKING FOR 1060ft.
FLEXIBLE ON 92 REEL

CLIENT APPROVAL

TPUSA DRAWING NUMBER GS018007-000-DW-5746-0021

DRAWING NUMBER MDP-38-HI-DG-0051

REV. A

TECHNIP USA, INC. TBPE FIRM REG. NO. F-3030

PLOT: 10/5/2010 2:14 PM BY: IRAWAN RUDI LAST SAVE: 10/5/2010 2:14 PM FILE NAME: R:\PROJECTS\GS018007_DECOMMISSIONING_CD1_AND _CDP2\SUBSEA\5746_PLAC'S\GS018007-000-DW-5746-0021-A.DWG

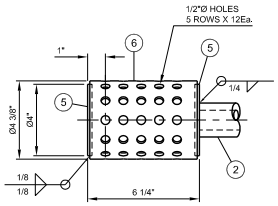

DETAIL 1

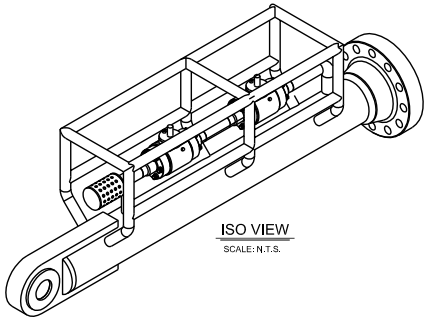

ISO VIEW

SCALE: N.T.S.

BILL OF MATERIAL				
ITEM	QTY.	DESCRIPTION	MATERIAL	REMARKS
1	1	PIPER, 2" X 1 1/2" 10,000 PSI CWP BV		REF NOTE 11
2	-	PIPE, ØXX x XX WT	X	
3	1	ELBOW, ØXX	X	
4	1	SUPPORT PIPE	X	
5	2	PLATE: 4"Ø x 1/4" THK.	X	
6	1	ROLLED PLATE: 3/16" THK.	X	
7	2	CAP PLATE, 1" THK.	API 2H GR 50 OR EQUIV.	

APPROXIMATE WEIGHT OF ASSEMBLY = 1200 lbs

BILL OF MATERIAL ABOVE IS FOR INFORMATION ONLY AND IS NOT TO BE USED AS A CUTTING LIST.

NOTES:

1. ALL DIMENSIONS ARE IN INCHES U.N.O.
2. DO NOT SCALE DRAWING.
3. ALL WELDS TO BE IN ACCORDANCE WITH A.W.S. D1.1 SPEC.
4. REMOVE ALL BURRS, SHARP EDGES, AND WELD SPATTER.
5. GENERAL FABRICATION TOLERANCES: LINEAR: ±0.08", ANGULAR: ±1°
6. SAFE WORKING LOAD = 45Te
7. N.D.T. INSPECTION: ALL WELDS 100% MPI PRIOR TO PULL TEST UT ALL FULL PEN. WELDS PRIOR TO PULL TEST MPI ALL WELDS AFTER PULL TEST.
8. ITEM TO BE MARKED: S.W.L. 45Te 1 1/2" HIGH BLACK LETTERS.
9. ITEM TO BE LOAD TESTED TO 45Te + 10% (1.1x SWL FROM LLOYDS REGISTER OF SHIPPING Ch.9)
10. ITEM TO BE HYDRO TESTED TO A PRESSURE OF XXX, XXX PRESSURE DROP.
11. REF PIPER DRAWING SD108-131111112(2XXH) REV 00.

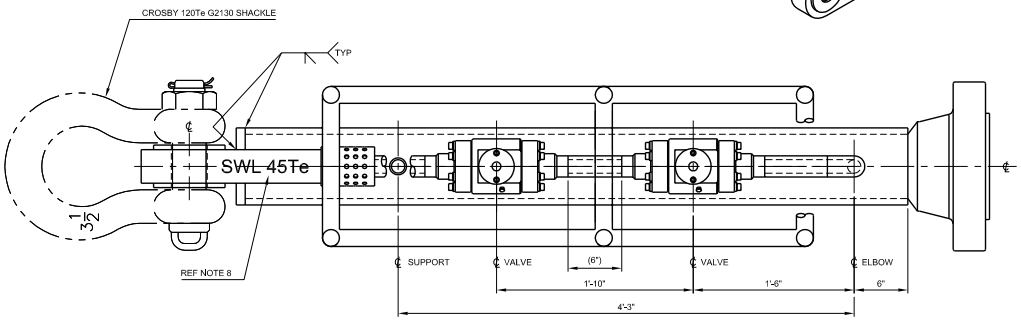

PLAN VIEW

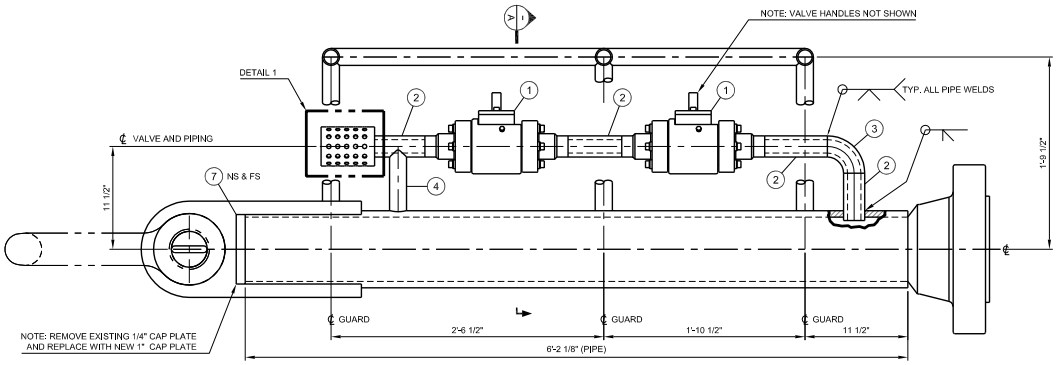

ELEVATION

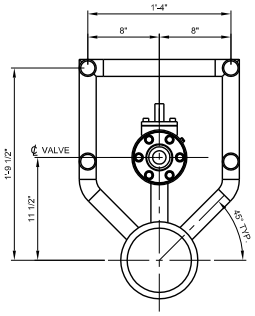

SECTION A

FLANGE REMOVED FOR CLARITY

REF DRAWING:
GSO15480-000-DD-5311-0002 REV D - APPALOOSA PULLHEAD

REV	DATE	BY	DESCRIPTION	CHKD	ENG	APRVD
0	22-JUNE-10	CMC	APPROVED FOR CONSTRUCTION	CAL	SBU	BDS
A	16-JUNE-10	GSO	ISSUED FOR REVIEW AND COMMENTS	CAL	SBU	BDS

Information contained in this document is the work product of Technip USA, Inc. and embodies confidential and proprietary information of Technip USA, Inc. and/or its client. Use of this information is restricted in accordance with conditions specified by the contract between Technip USA, Inc. and its client. Technip USA, Inc. disclaims any and all liabilities for any changes or modifications to this document which are made by any person other than Technip

CONFIDENTIALITY CATEGORY: C.2

bp

Technip
TECHNIP USA, Inc.

BP MACONDO CDP PHASE II

45Te PULLHEAD MODIFICATION
USING EXISTING APPALOOSA PULLHEAD

DRAWN	CHECKED	ENGINEER	SCALE
GSO	CAL	SBU	1/6
DATE	DATE	DATE	SHEET
16-JUNE-10	22-JUNE-10	22-JUNE-10	1 OF 1

CLIENT APPROVAL

TPUSA DRAWING NUMBER: GS017455-000-DD-5311-0011

DRAWING NUMBER: CDP-39-GE-DG-0059

REV. 0

PLOT: 6/22/2010 1:01 PM BY: MCCLURE, BRIAN LAST SAVE: 6/22/2010 12:49 PM FILE NAME: R:\PROJECTS\GS017455_CDP\SUBSEA\5311_PIPELINE_HEADS\GS017455-000-DD-5311-0011-0.DWG

TECHNIP USA, INC. TBPE FIRM REG. NO. F-3030

Appendix 3: Operations and Rigging Drawings and Documents

Drawing Nr	Title	Produced by
TC1034-HED-6003	Surface Jumper Recovery with Skandi Neptune Sheet 1	Subsea 7
TC1034-HED-6003	Surface Jumper Recovery with Skandi Neptune Sheet 2	Subsea 7
TC1034-HED-6003	Surface Jumper Recovery with Skandi Neptune Sheet 3	Subsea 7
TC1034-HED-6003	Surface Jumper Recovery with Skandi Neptune Sheet 4	Subsea 7
TC1034-HED-6003	Surface Jumper Recovery with Skandi Neptune Sheet 5	Subsea 7
TC1034-HED-6003	Surface Jumper Recovery with Skandi Neptune Sheet 6	Subsea 7
TC1034-HED-6003	Surface Jumper Recovery with Skandi Neptune Sheet 7	Subsea 7
TC1034-HED-6003	Surface Jumper Recovery with Skandi Neptune Sheet 8	Subsea 7
TC1034-HED-4001	Surface Jumper Recovery Rigging	Subsea 7
TC1034-HED-4003	Crane Rigging for Surface Jumper 2nd End Over VLS	Subsea 7
CDP-30-AR-DG-0001	CDP1 Jumper Design Route	BP
CDP-30-AR-DG-0004	CDP2 Jumper Design Route	BP
IRN-ISAB1-012	IRN Certificate	BP

STEP 1

- SET UP SKANDI NEPTUNE OVER FLEXIBLE PULLHEAD.
- DEPLOY MAIN CRANE WIRE WITH RECOVERY RIGGING TO A DEPTH OF 50' ABOVE SEABED.

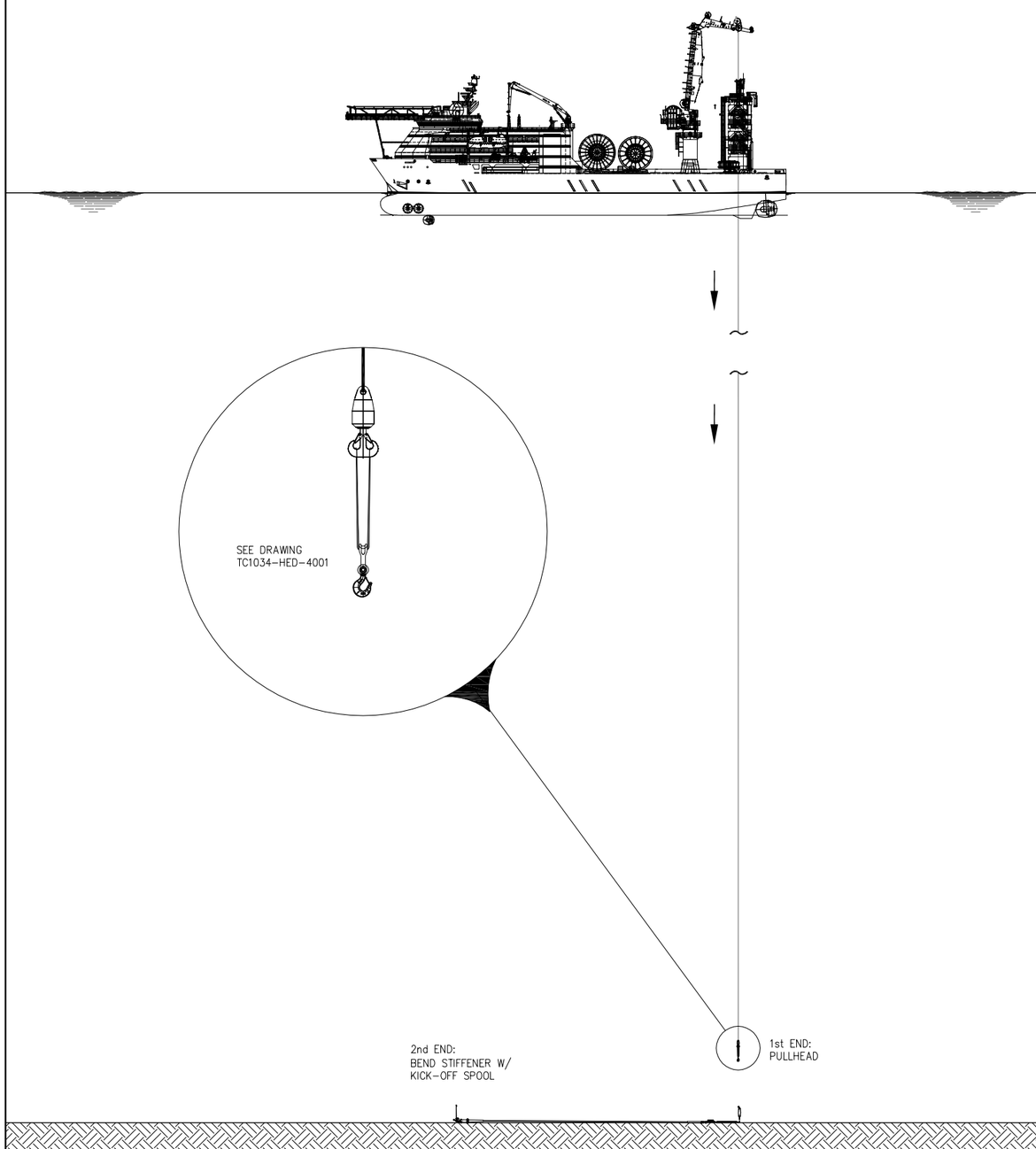

STEP 2

- MOVE VESSEL SO THAT RIGGING IS ABOVE PULLING HEAD.
- LOWER ROV HOOK TO ENABLE CONNECTION TO SYNTHETIC GROMMET ON PULLING HEAD.
- COMMENCE RECOVERY OF FLEXIBLE AS PER LAY TABLE.

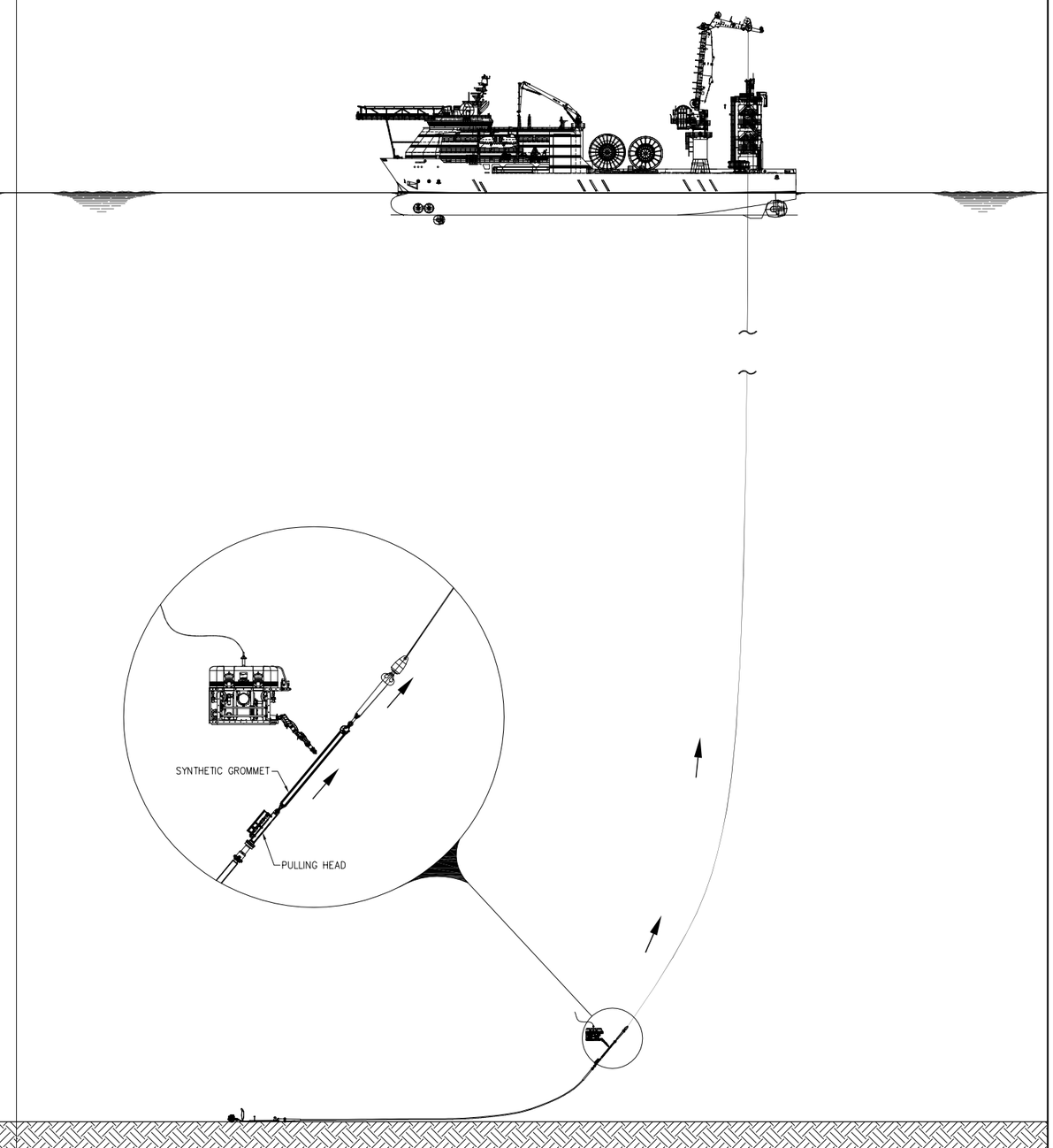

REFERENCE DRAWINGS:

TC1034-HED-4001 SURFACE JUMPER RECOVERY RIGGING

REV	DATE	BY	DESCRIPTION	DO CHECKED	CHECKED	APPROVED
C1	12-Nov-10	JohnS	ISSUED FOR CONSTRUCTION	CWS	MSz	SSa
B1	05-NOV-10	JohnS	ISSUED FOR CLIENT REVIEW	CWS	MSz	SSa
A1	03-NOV-10	JohnS	ISSUED FOR INTERNAL REVIEW	CWS	MSz	SSa

This document, and all information contained herein, is the property of and embodies confidential information of, Subsea 7 (US) LLC and may not be reproduced or disclosed to others or used to manufacture or have manufacture on behalf of others use for any other purpose without the prior written consent of Subsea 7 (US) LLC. This document shall be returned to Subsea 7 (US) LLC on request.

subsea 7
15990 N. BARKER'S LANDING, SUITE 200
HOUSTON, TEXAS 77079

bp

bp MACONDO

CLIENT DRAWING NUMBER: N/A

CLIENT REV: N/A

SCALE: NTS

SHEET: 1 of 8

SURFACE JUMPER RECOVERY WITH SKANDI NEPTUNE

DRAWING NUMBER: TC1034-HED-6003

REV.: C1

STEP 3

- RECOVER FLEXIBLE UNTIL IT IS HANGING COMPLETELY VERTICAL IN THE WATER COLUMN.
- CONTINUE RECOVERY UNTIL FLEXIBLE PULL HEAD IS AT (–)100' WATER DEPTH.
- ROV TO CONTINUOUSLY MONITOR DURING RECOVERY.

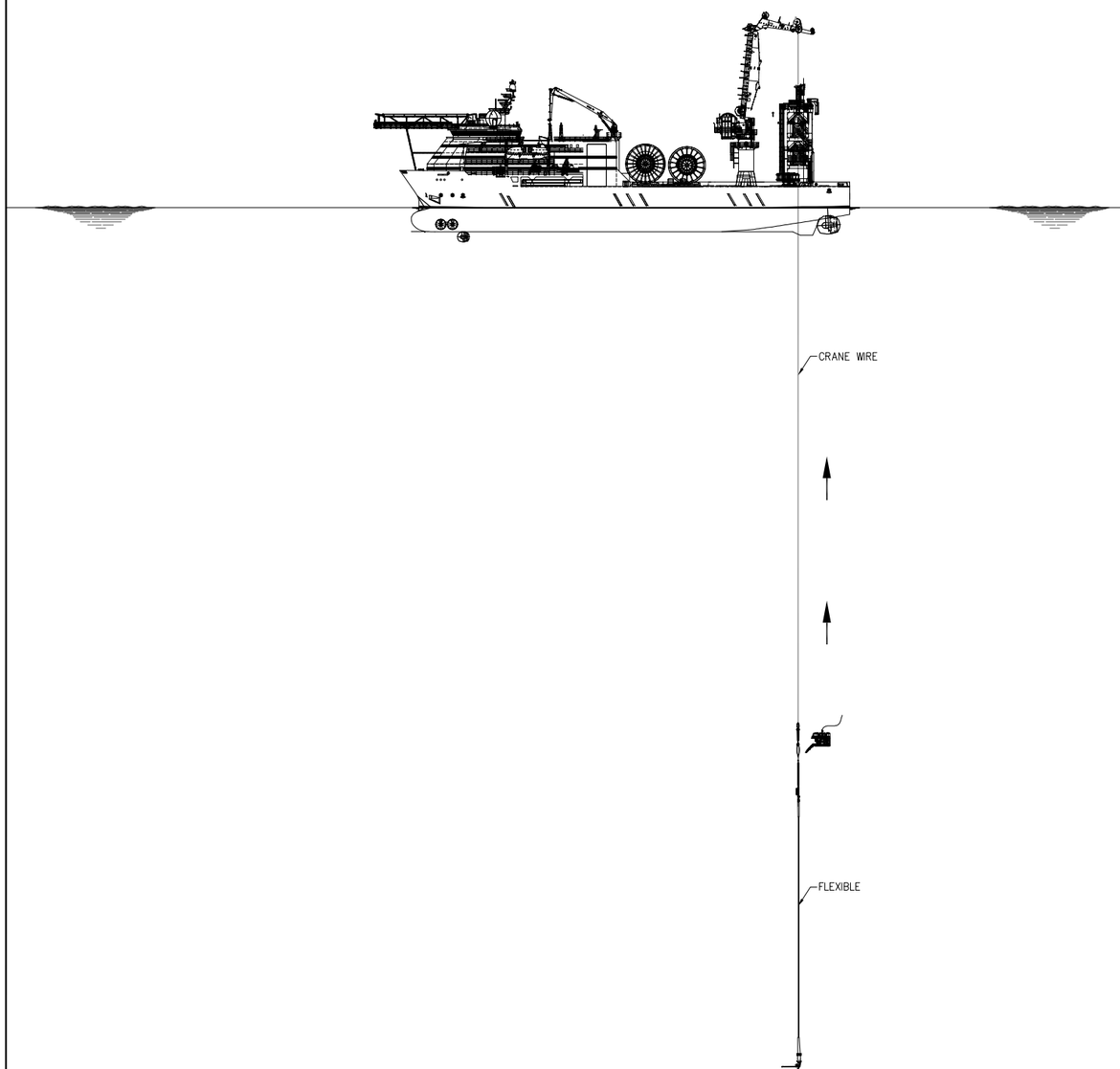

STEP 4

- CONTINUE TO PAY-IN ON CRANE TO RECOVER
  1st END OF FLEXIBLE INTO THE LAY TOWER WORK STATION AS PER LAY TABLE.

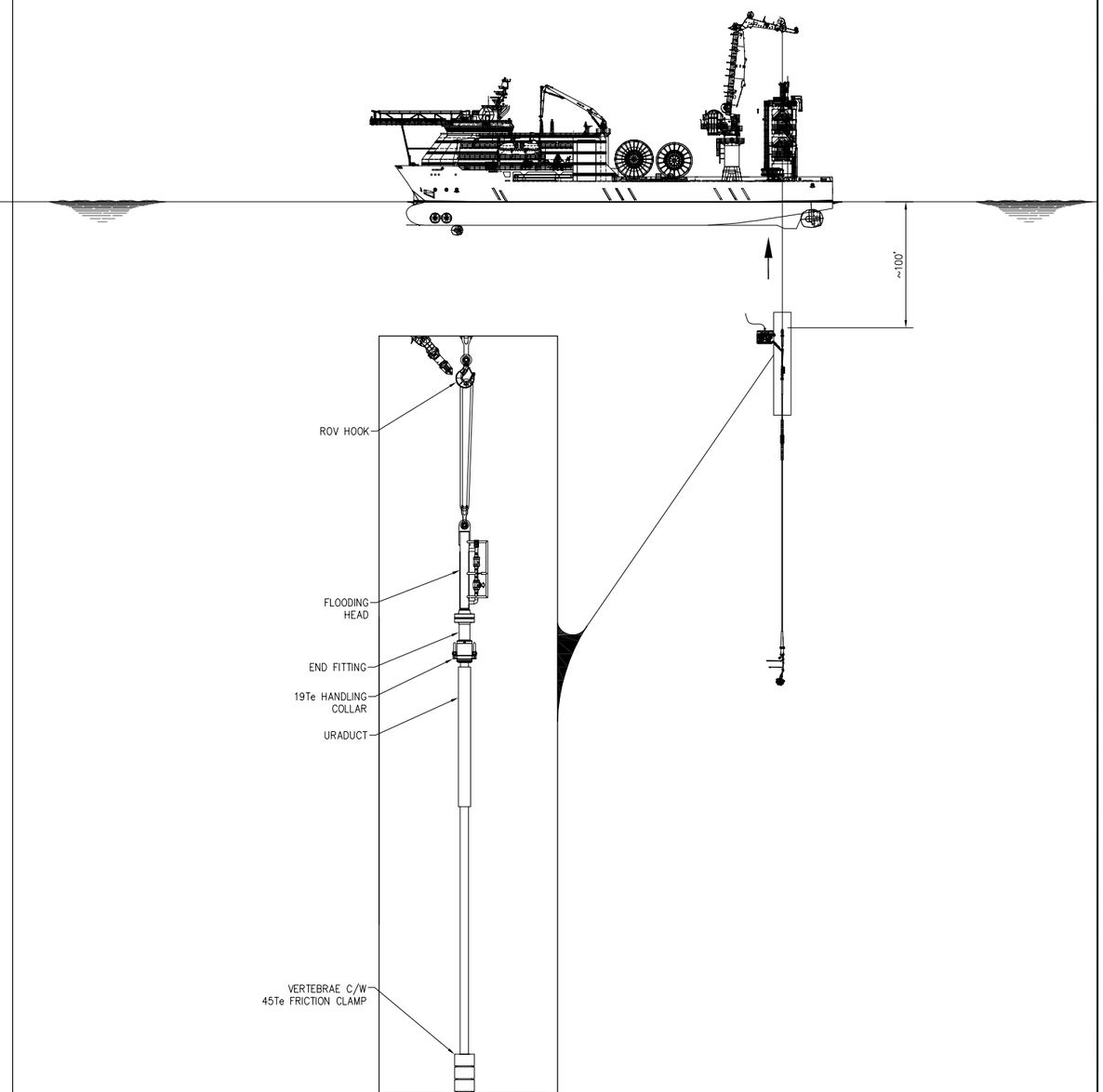

REV	DATE	BY	DESCRIPTION	DO CHECKED	CHECKED	APPROVED
C1	12-Nov-10	JohnS	ISSUED FOR CONSTRUCTION	CWS	MSz	SSa
B1	05-NOV-10	JohnS	ISSUED FOR CLIENT REVIEW	CWS	MSz	SSa
A1	03-NOV-10	JohnS	ISSUED FOR INTERNAL REVIEW	CWS	MSz	SSa

This document, and all information contained herein, is the property of and embodies confidential information of, Subsea 7 (US) LLC and may not be reproduced or disclosed to others or used to manufacture or have manufacture on behalf of others use for any other purpose without the prior written consent of Subsea 7 (US) LLC. This document shall be returned to Subsea 7 (US) LLC on request.

subsea 7
15990 N. BARKER'S LANDING, SUITE 200
HOUSTON, TEXAS 77079

bp

bp MACONDO

SURFACE JUMPER RECOVERY WITH SKANDI NEPTUNE

CLIENT DRAWING NUMBER	CLIENT REV
N/A	N/A

SCALE	SHEET
NTS	2 of 8

DRAWING NUMBER	REV.
TC1034-HED-6003	C1

STEP 5

- BRING PULLHEAD INTO THE VLS WORKSTATION WITH THE MAIN CRANE.
- ROUTE VLS TUGGER OVER VLS INTO WORKSTATION.

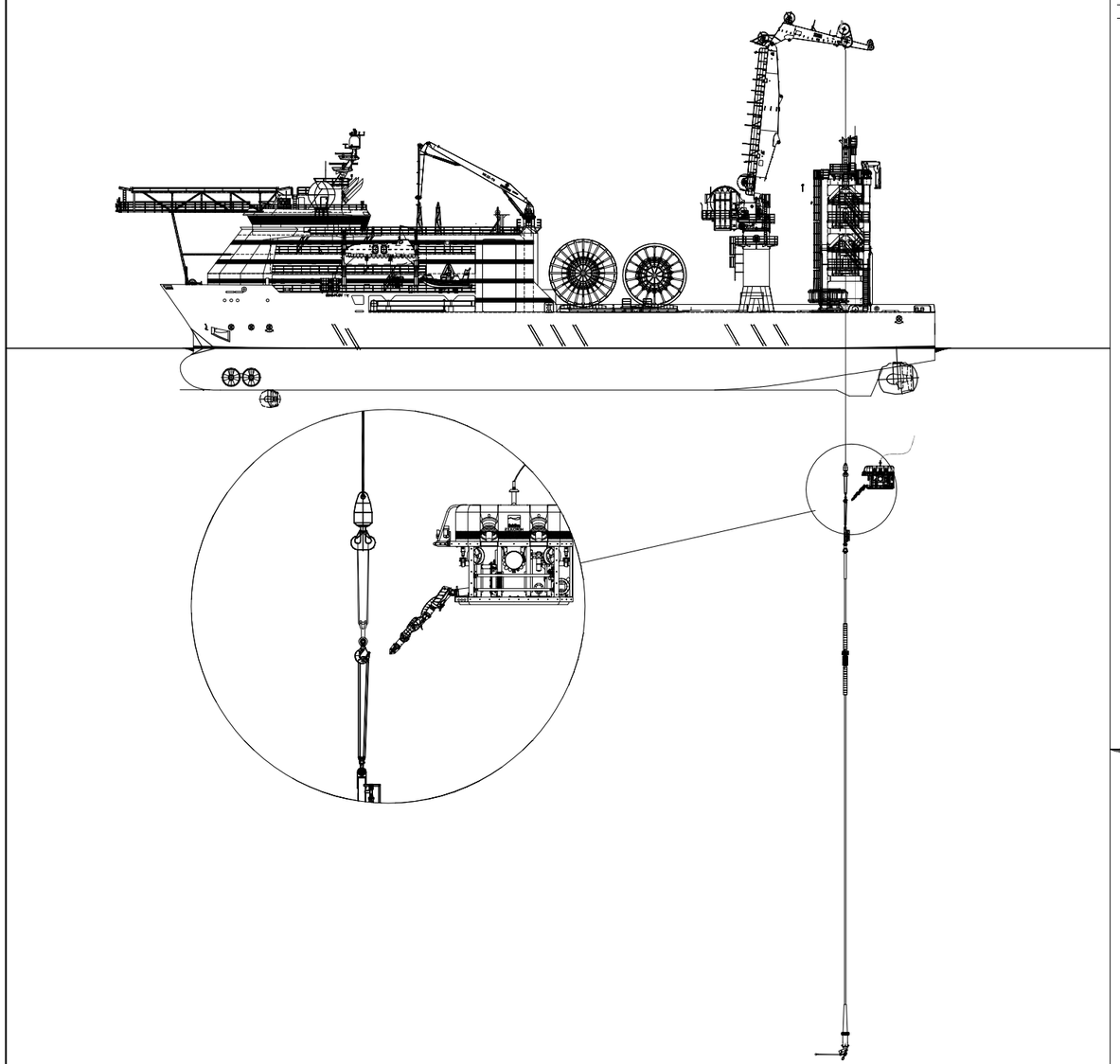

STEP 6

- REMOVE URADUCT FROM FLEXIBLE
- CONNECT TUGGER WINCH TO FLEXIBLE BEHIND PULL HEAD
- REMOVE VERTEBRATE ADAPTERS FROM FLEXIBLE AND FROM FRICTION CLAMP
- REMOVE 45Te FRICTION CLAMP AND FRICTION CLAMP FROM FLEXIBLE

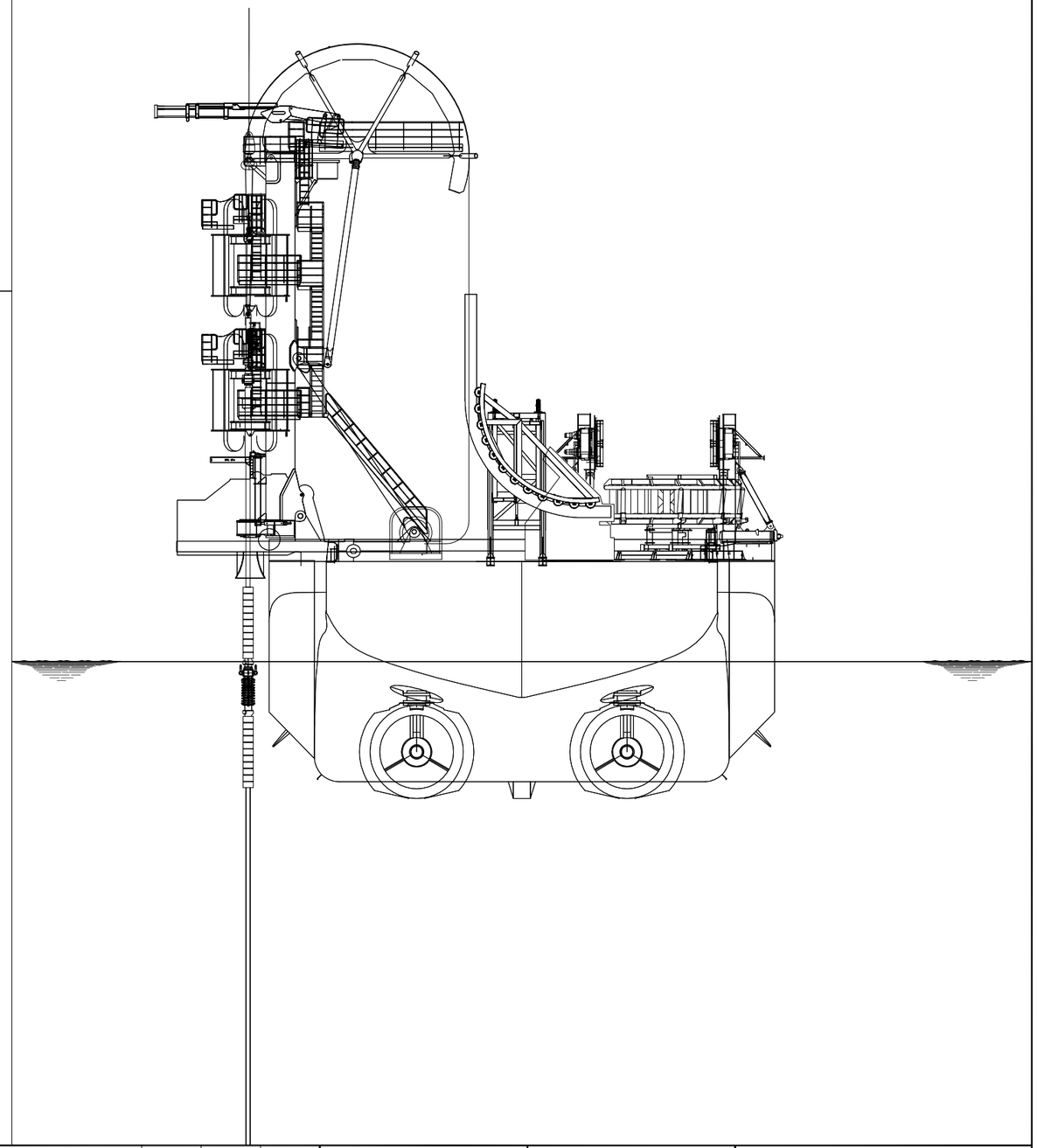

REV	DATE	BY	DESCRIPTION	DO CHECKED	CHECKED	APPROVED
C1	12-Nov-10	JohnS	ISSUED FOR CONSTRUCTION	CWS	MSz	SSa
B1	06-NOV-10	JohnS	ISSUED FOR CLIENT REVIEW	CWS	MSz	SSa
A1	03-NOV-10	JohnS	ISSUED FOR INTERNAL REVIEW	CWS	MSz	SSa

This document, and all information contained herein, is the property of and embodies confidential information of, Subsea 7 (US) LLC and may not be reproduced or disclosed to others or used to manufacture or have manufacture on behalf of others use for any other purpose without the prior written consent of Subsea 7 (US) LLC. This document shall be returned to Subsea 7 (US) LLC on request.

subsea 7
15990 N. BARKER'S LANDING, SUITE 200
HOUSTON, TEXAS 77079

bp

bp MACONDO

SURFACE JUMPER RECOVERY WITH SKANDI NEPTUNE

CLIENT DRAWING NUMBER	CLIENT REV
N/A	N/A

SCALE	SHEET
NTS	3 of 8

DRAWING NUMBER	REV.
TC1034-HED-6003	C1

STEP 7

- USING MAIN CRANE, LIFT PULL HEAD THROUGH OPEN TENSIONERS TO TOP OF VLS
- TUGGER WINCH WILL BE UTILIZED FOR GUIDANCE OF THE PULL HEAD THROUGH THE SYSTEM

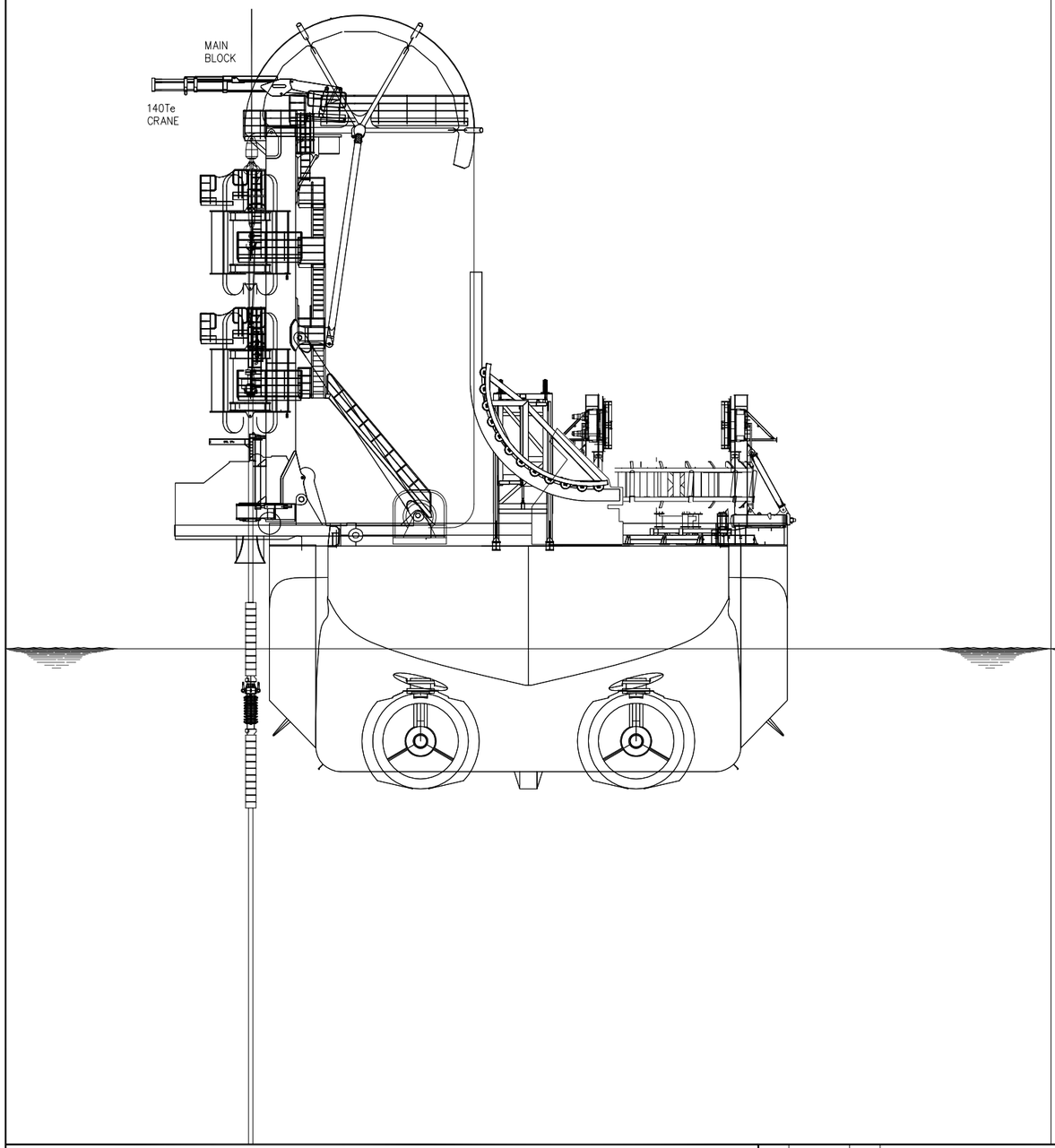

STEP 8

- ONCE PULL HEAD IS THROUGH TENSIONERS, CLOSE TENSIONERS

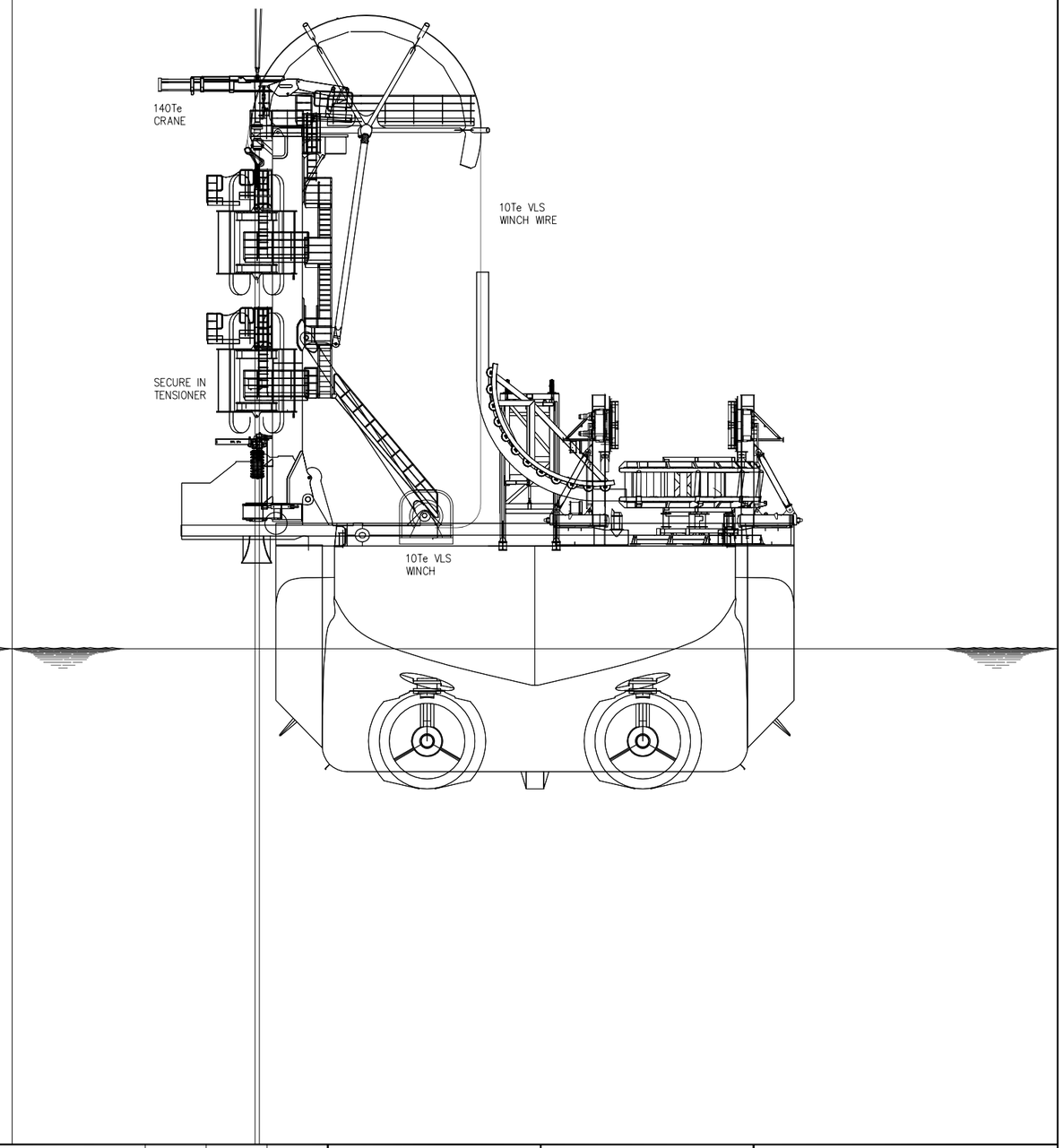

REV	DATE	BY	DESCRIPTION	DO CHECKED	CHECKED	APPROVED
C1	12-Nov-10	JohnS	ISSUED FOR CONSTRUCTION	CWS	MSz	SSa
B1	05-NOV-10	JohnS	ISSUED FOR CLIENT REVIEW	CWS	MSz	SSa
A1	04-NOV-10	JohnS	ISSUED FOR INTERNAL REVIEW	CWS	MSz	SSa

This document, and all information contained herein, is the property of and embodies confidential information of, Subsea 7 (US) LLC and may not be reproduced or disclosed to others or used to manufacture or have manufacture on behalf of others use for any other purpose without the prior written consent of Subsea 7 (US) LLC. This document shall be returned to Subsea 7 (US) LLC on request.

subsea 7
15990 N. BARKER'S LANDING, SUITE 200
HOUSTON, TEXAS 77079

bp

bp MACONDO

SURFACE JUMPER RECOVERY
WITH SKANDI NEPTUNE

CLIENT DRAWING NUMBER	CLIENT REV
N/A	N/A

SCALE	SHEET
NTS	4 of 8

DRAWING NUMBER	REV.
TC1034-HED-6003	C1

STEP 9

- USING MAIN CRANE, LIFT PULL HEAD OVER VLS
- TRANSFER THE PULL HEAD DOWN TO DECK

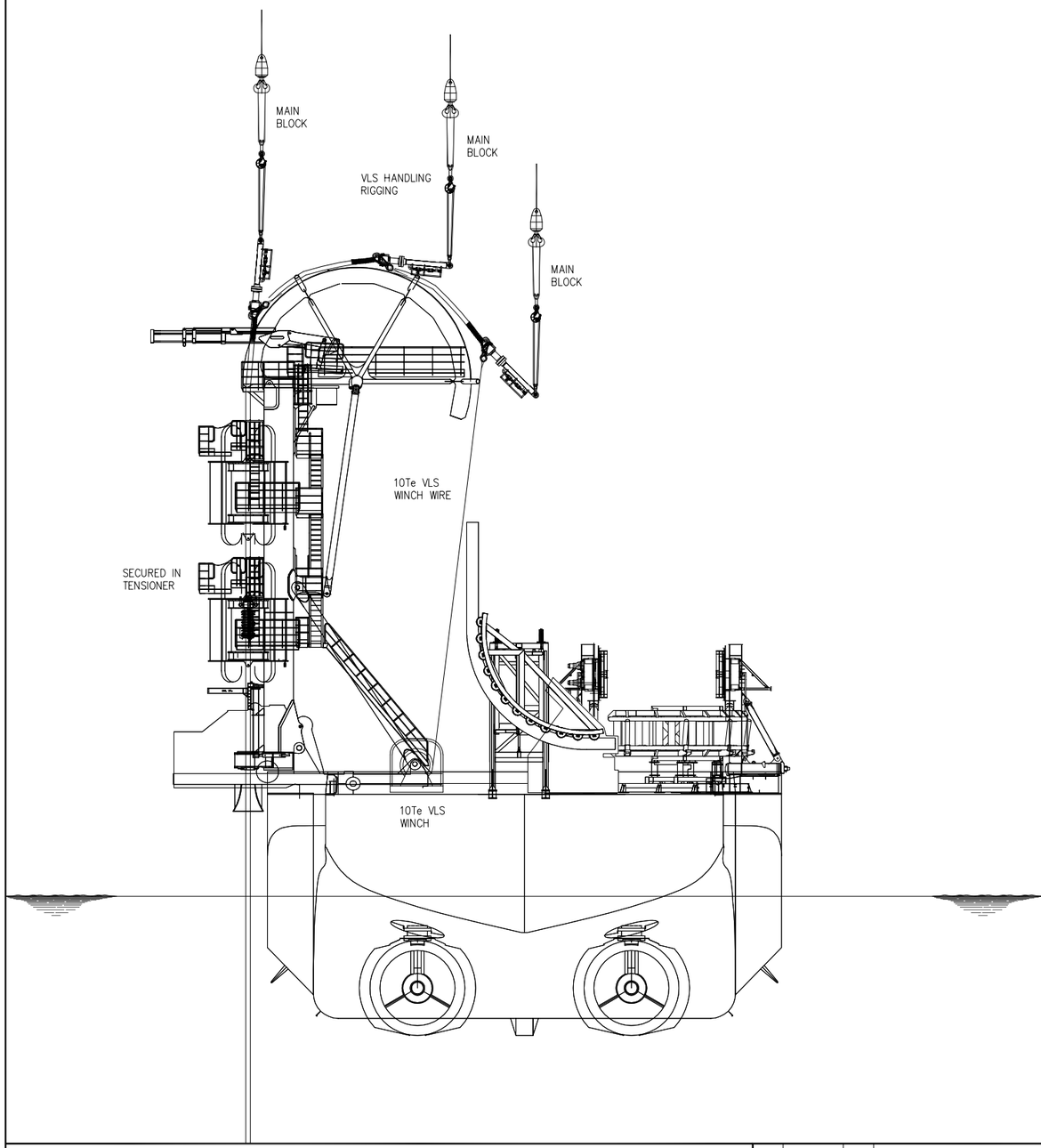

STEP 10

- CONTINUE TO PAY IN ON FLEXIBLE JUMPER TO SPOOL FLEXIBLE ONTO REEL UNITL 1st DBM ARRIVES AT WORK STATION.
- REMOVE OUTER BUOYANCY AND INNER CLAMP FROMFLEXIBLE AND STORE IN HALF HEIGHT ON DECK. REPEAT FOR REMAINING 14 OFF DBM's.
- REMOVE "APPALOOSA" FLOODING HEAD FROM END OF FLEXIBLE JUMPER USING FLOGGING SPANNERS TO RELEASE STUD BOLTS AND REPLACE WITH STANDARD PULLHEAD (FSR2 ONLY)

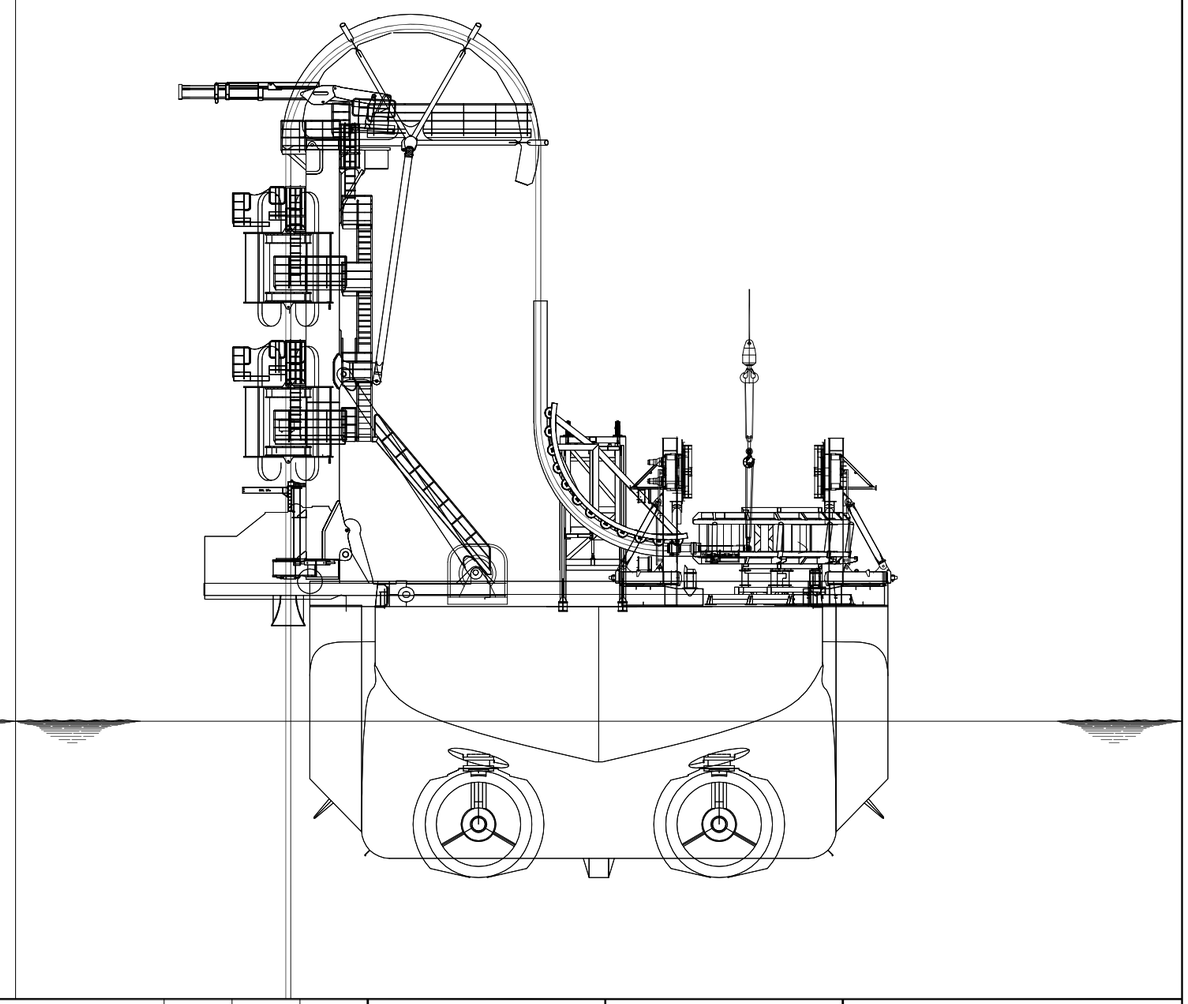

REV	DATE	BY	DESCRIPTION	DO CHECKED	CHECKED	APPROVED
C1	12-Nov-10	JohnS	ISSUED FOR CONSTRUCTION	CWS	MSz	SSa
B1	05-NOV-10	JohnS	ISSUED FOR CLIENT REVIEW	CWS	MSz	SSa
A1	04-NOV-10	JohnS	ISSUED FOR INTERNAL REVIEW	CWS	MSz	SSa

This document, and all information contained herein, is the property of and embodies confidential information of, Subsea 7 (US) LLC and may not be reproduced or disclosed to others or used to manufacture or have manufacture on behalf of others use for any other purpose without the prior written consent of Subsea 7 (US) LLC. This document shall be returned to Subsea 7 (US) LLC on request.

subsea 7
15990 N. BARKER'S LANDING, SUITE 200
HOUSTON, TEXAS 77079

bp

bp MACONDO

SURFACE JUMPER RECOVERY WITH SKANDI NEPTUNE

CLIENT DRAWING NUMBER	CLIENT REV
N/A	N/A

SCALE	SHEET
NTS	5 of 8

DRAWING NUMBER	REV.
TC1034-HED-6003	C1

STEP 11

- CONNECT DECK TUGGER FROM RDS TO PULLHEAD
- START TO PAY-IN ON FLEXIBLE TO SPOOL FLEXIBLE ONTO STORAGE REEL AS PER THE PACKING ARRANGEMENT DRAWING

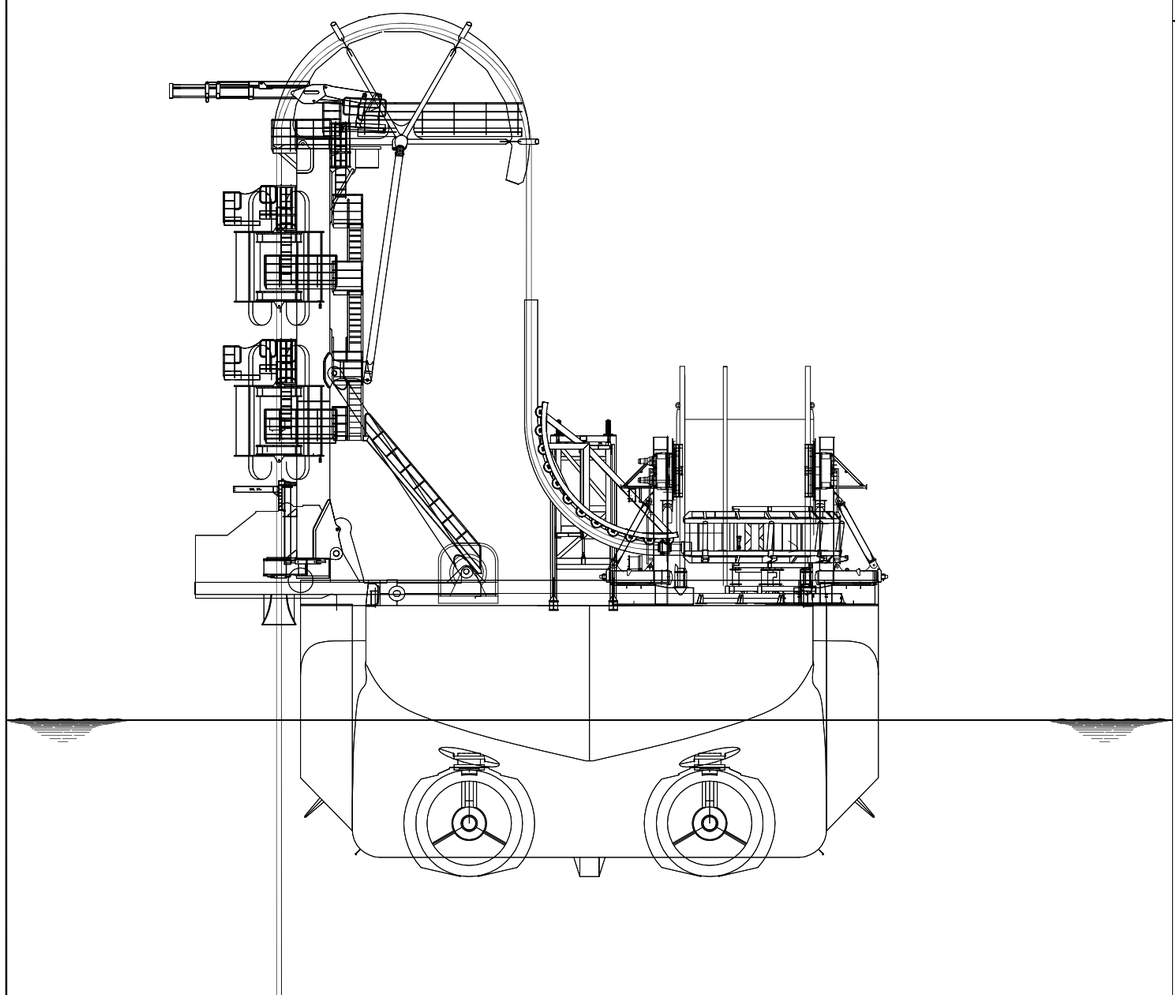

STEP 12

- WHEN CRANE IS FREE, RIG 11Te ROV HOOK TO MAIN CRANE AND DEPLOY
- TRANSFER 5Te CLUMP WEIGHT FROM FLEXIBLE TO CRANE AND RECOVER CLUMP WEIGHT TO DECK
- CONTINUE TO PAY-IN AND REMOVE URADUCT SECTIONS FROM FLEXIBLE AS THEY ARRIVE IN THE WORK STATION

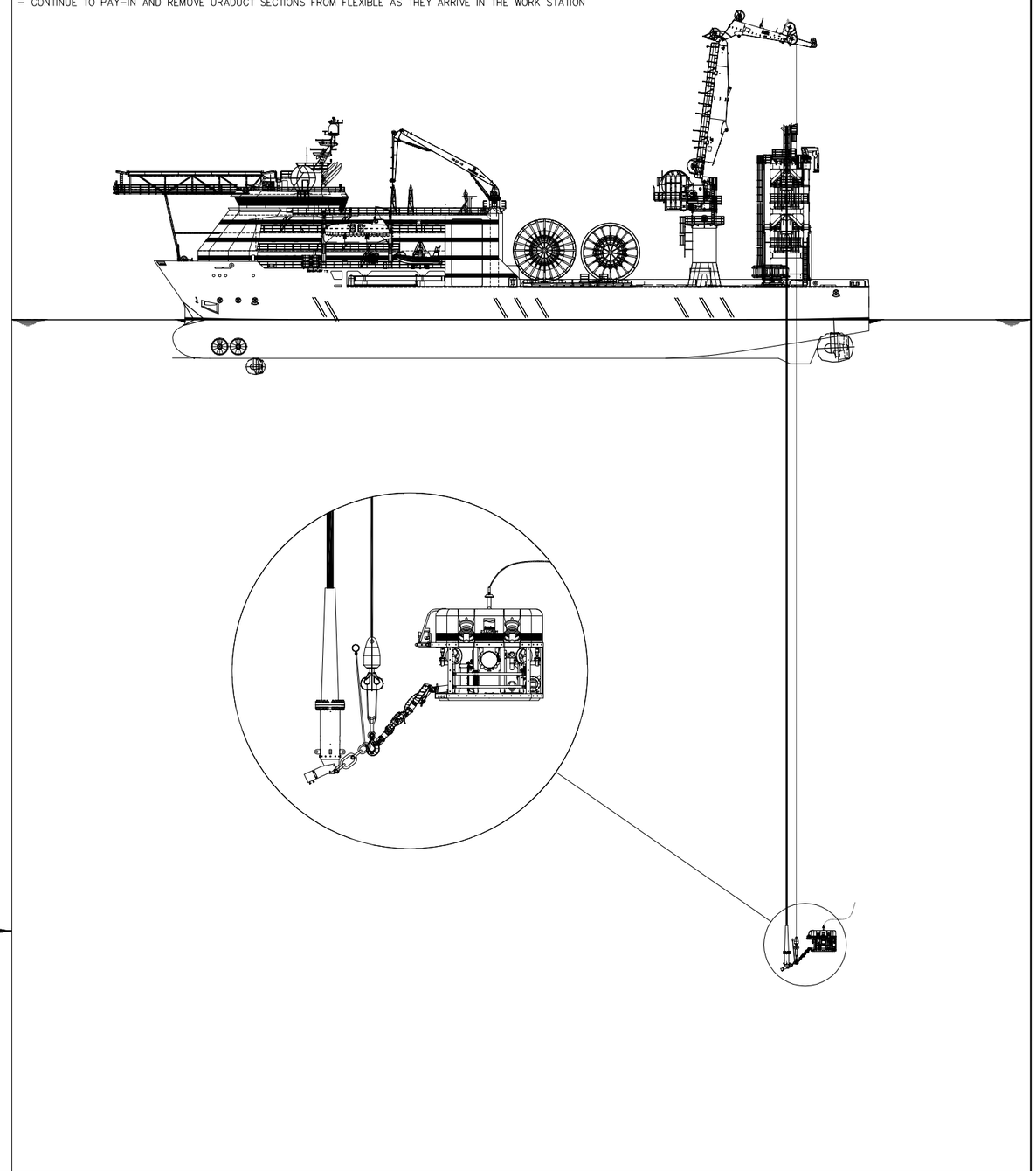

REV	DATE	BY	DESCRIPTION	DO CHECKED	CHECKED	APPROVED
C1	12-Nov-10	JohnS	ISSUED FOR CONSTRUCTION	CWS	MSz	SSa
B1	05-NOV-10	JohnS	ISSUED FOR REVIEW	CWS	MSz	SSa
A1	04-NOV-10	JohnS	ISSUED FOR INTERNAL REVIEW	CWS	MSz	SSa

This document, and all information contained herein, is the property of and embodies confidential information of, Subsea 7 (US) LLC and may not be reproduced or disclosed to others or used to manufacture or have manufacture on behalf of others use for any other purpose without the prior written consent of Subsea 7 (US) LLC. This document shall be returned to Subsea 7 (US) LLC on request.

subsea 7
15990 N. BARKER'S LANDING, SUITE 200
HOUSTON, TEXAS 77079

bp

bp MACONDO

SURFACE JUMPER RECOVERY WITH SKANDI NEPTUNE

CLIENT DRAWING NUMBER	CLIENT REV
N/A	N/A

SCALE	SHEET
NTS	6 of 8

DRAWING NUMBER	REV.
TC1034-HED-6003	C1

STEP 13

- PAY-IN ON FLEXIBLE UNTIL KICK-OFF SPOOL HEAD ARRIVES IN WORK STATION
- ROUTE VLS TUGGER WINCH UNDER SYSTEM
- ATTACH TUGGER TO CHINESE FINGER ABOVE KICK-OFF SPOOL TO USE AS A HOLDBACK AS FLEXIBLE GOES OVER SYSTEM

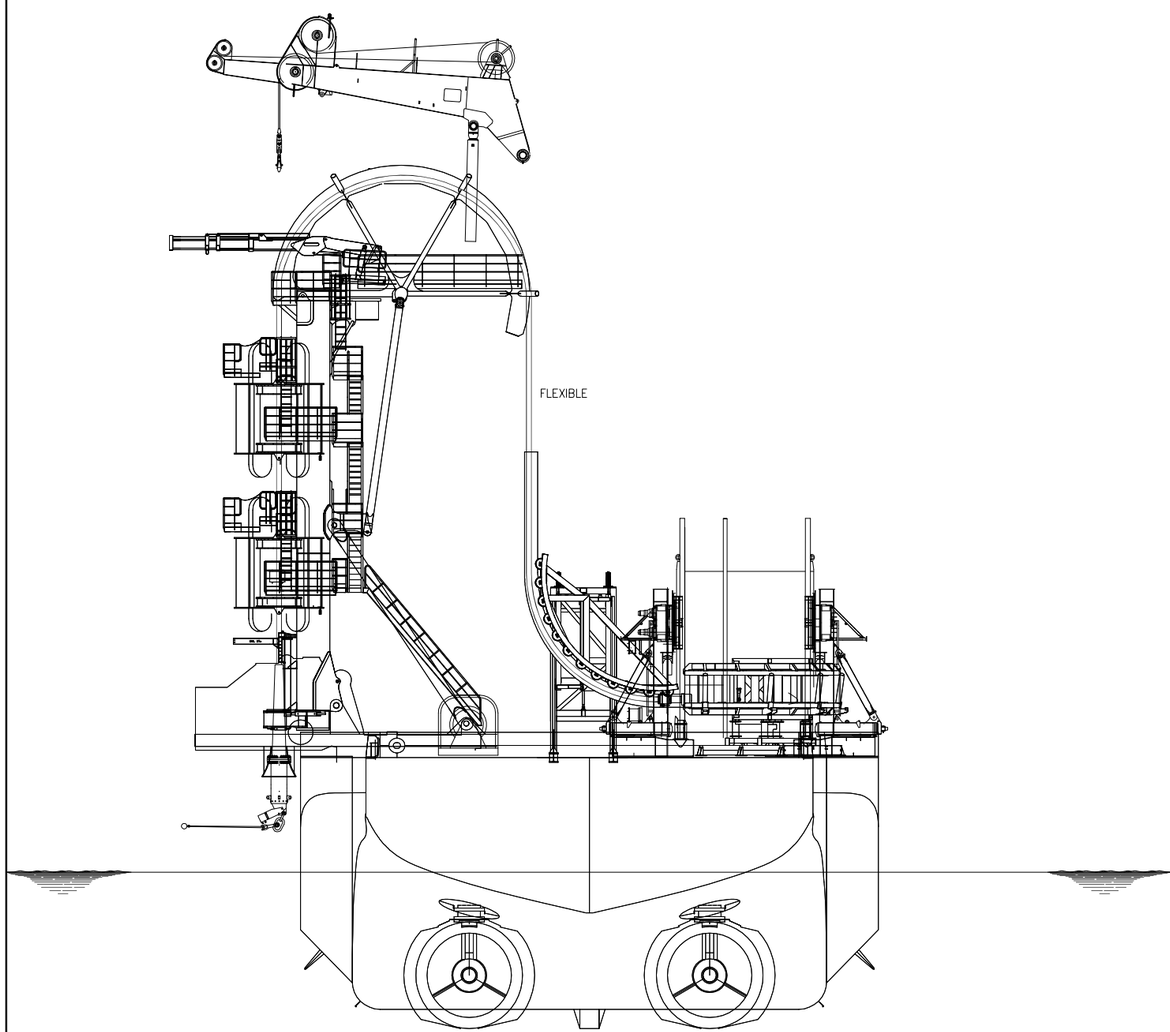

STEP 14

- ATTACH MAIN CRANE TO KICK-OFF SPOOL
- OPEN TENSIONERS AND LIFT FLEXIBLE OUT OF TENSIONERS AND OVER VLS

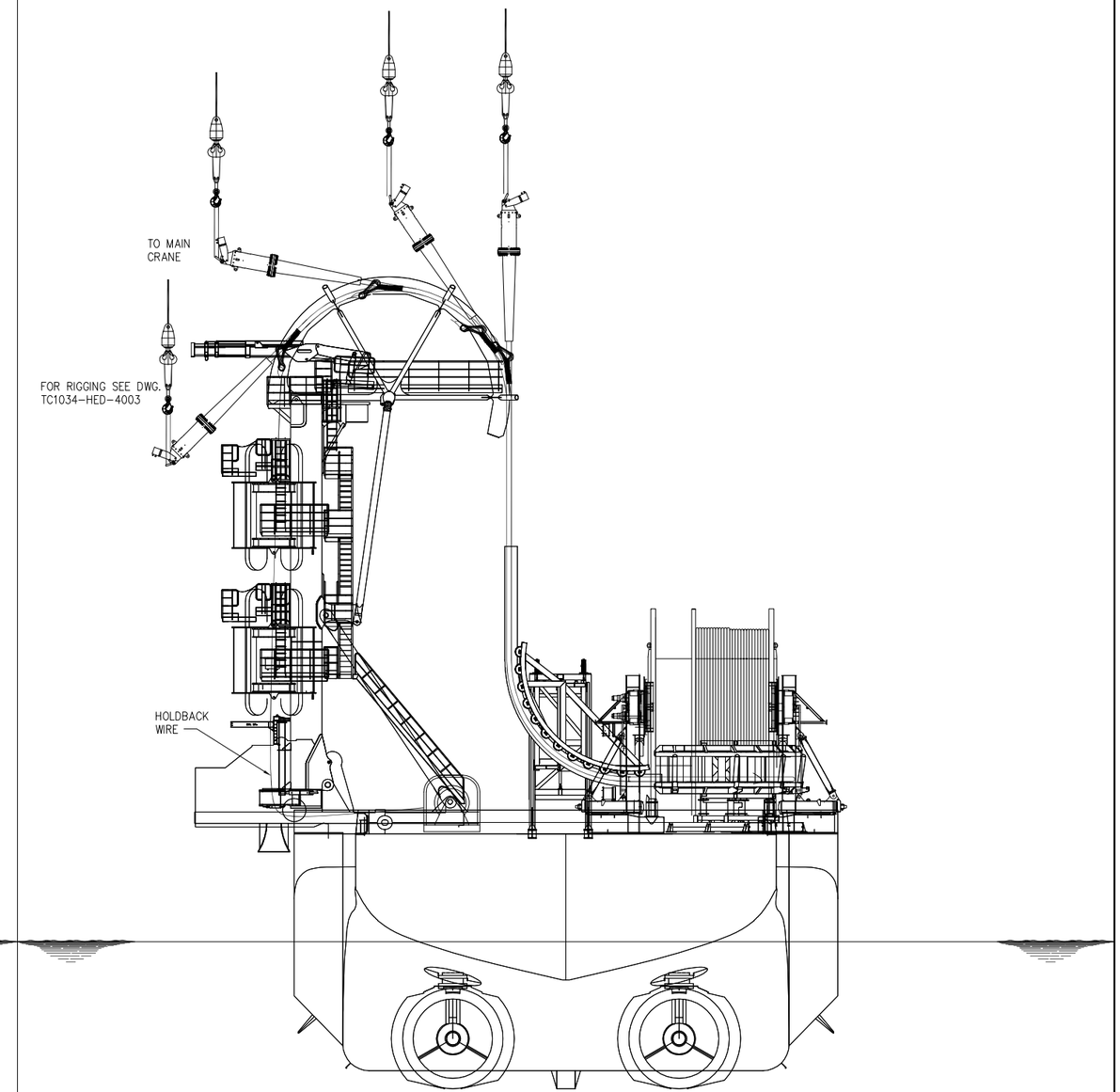

REFERENCE DRAWINGS:

TC1034-HED-4003 SURFACE JUMPER RECOVERY 2nd END CRANE RIGGING

REV	DATE	BY	DESCRIPTION	DO CHECKED	CHECKED	APPROVED
C1	12-Nov-10	JohnS	ISSUED FOR CONSTRUCTION	CWS	MSz	SSa
B1	05-NOV-10	JohnS	ISSUED FOR CLIENT REVIEW	CWS	MSz	SSa
A1	04-NOV-10	JohnS	ISSUED FOR INTERNAL REVIEW	CWS	MSz	SSa

This document, and all information contained herein, is the property of and embodies confidential information of, Subsea 7 (US) LLC and may not be reproduced or disclosed to others or used to manufacture or have manufacture on behalf of others use for any other purpose without the prior written consent of Subsea 7 (US) LLC. This document shall be returned to Subsea 7 (US) LLC on request.

subsea 7
15990 N. BARKER'S LANDING, SUITE 200
HOUSTON, TEXAS 77079

bp

bp MACONDO

SURFACE JUMPER RECOVERY WITH SKANDI NEPTUNE

CLIENT DRAWING NUMBER	CLIENT REV
N/A	N/A

SCALE	SHEET
NTS	7 of 8

DRAWING NUMBER	REV.
TC1034-HED-6003	C1

STEP 15

- LOWER 2nd END KICK OFF SPOOL DOWN TO DECK LEVEL AND SUPPORT END OF FLEXIBLE ON TEMPORARY SUPPORT BLOCKS.
- DISCONNECT HOLDBACK WINCH, REMOVE KICK OFF SPOOL HEAD BEND STIFFENER ADAPTOR FROM END OF FLEXIBLE.

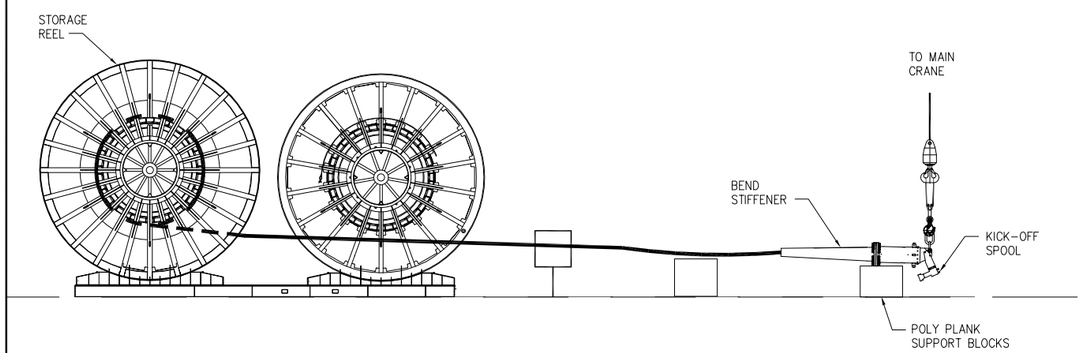

STEP 16

- ATTACH 2nd END PULLING HEAD ONTO FLEXIBLE END FLANGE.
- SPOOL REMAINDER OF FLEXIBLE ONTO REEL AND SECURE END FOR TRANSPORTATION AND STORAGE.

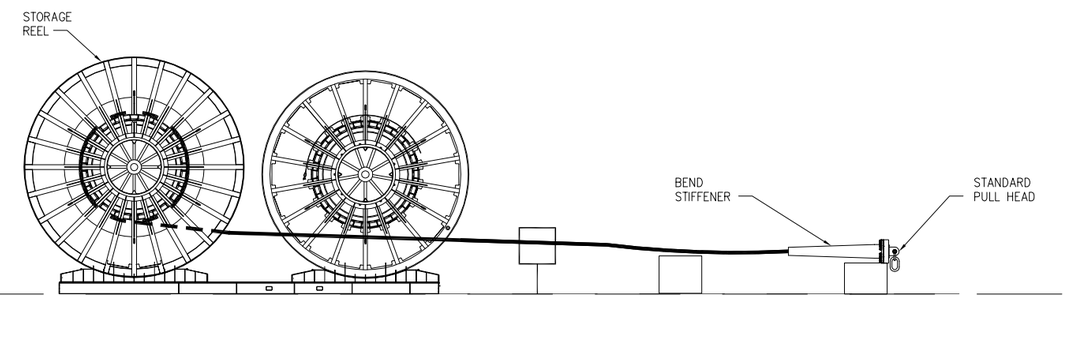

REV	DATE	BY	DESCRIPTION	DO CHECKED	CHECKED	APPROVED
C1	12-Nov-10	JohnS	ISSUED FOR CONSTRUCTION	CWS	MSz	SSa
B1	05-NOV-10	JohnS	ISSUED FOR CLIENT REVIEW	CWS	MSz	SSa
A1	04-NOV-10	JohnS	ISSUED FOR INTERNAL REVIEW	CWS	MSz	SSa

This document, and all information contained herein, is the property of and embodies confidential information of, Subsea 7 (US) LLC and may not be reproduced or disclosed to others or used to manufacture or have manufacture on behalf of others use for any other purpose without the prior written consent of Subsea 7 (US) LLC. This document shall be returned to Subsea 7 (US) LLC on request.

subsea 7
15990 N. BARKER'S LANDING, SUITE 200
HOUSTON, TEXAS 77079

bp

bp MACONDO

CLIENT DRAWING NUMBER: N/A
CLIENT REV: N/A
SCALE: NTS
SHEET: 8 of 8

SURFACE JUMPER RECOVERY WITH SKANDI NEPTUNE

DRAWING NUMBER: TC1034-HED-6003
REV.: C1

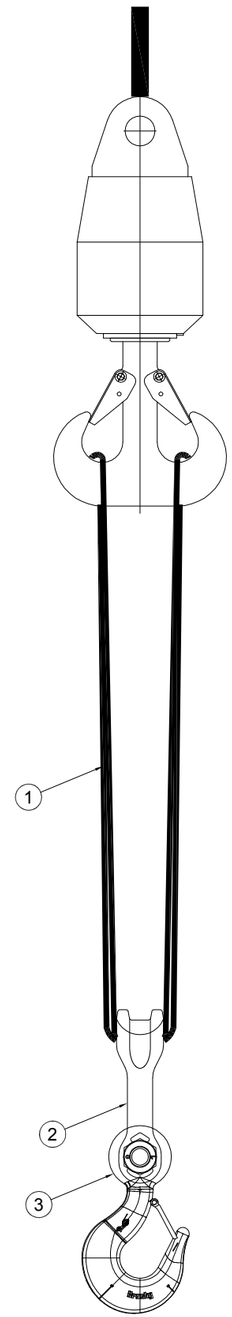

RIGGING LIST

ITEM	QTY	DESCRIPTION	ROPE GRADE	DIA (in)	DIA (mm)	CONSTRUCTION	LENGTH (ft-in)	LENGTH (mm)	EYE TYPES		MBL (Te)	WLL (lbs)	WLL (Te)	SINGLE PART WEIGHT (kg)	TOTAL SET WEIGHT (kg)
									CRANE	MANIFOLD					
1	1	SYNTHETIC ROUNDSLING	~	6.00	152	TWIN PATH TPXC	16'-5"	5000	~	~	~		30		
2	1	WIDE BODY SHACKLE	~	2.25	57	CROSBY G-2160	9.38"	238	~	~	~		55	32	
3	1	ROV HOOK	~	6.00	152	CROSBY L-320R	~	~	~	~	~	~	60	102	

NOTE: DIAMETER DIMENSION REFERS TO SHACKLE PIN DIAMETER AND LENGTH DIMENSION REFERS TO EFFECTIVE LENGTH

RIGGING NOTES:

1. SUPPLY OF WIRE SLINGS TO COMPLY WITH BS EN 12385-4 OR EQUIVALENT. DOCUMENTATION FOR WIRE SLINGS.
2. WIRE SLING LENGTHS ARE FROM BEARING POINT TO BEARING POINT.
3. ALL SLING ASSEMBLIES TO HAVE I.D. TAG ATTACHED. (RITCHEY TAG OR SIMILAR) SEE TYPICAL I.D. TAG DETAILS THIS DWG.

GENERAL GUIDANCE:

A. ORIGINAL 'CERTIFICATES' TO GO IN 'AS BUILT' CERTIFICATION PACKAGE TO SUBSEA 7 EQUIPMENT DEPT. RIGGING SECTION.
B. ALL RIGGING SHOULD BE EXPEDITED VIA SUBSEA 7 BASE FOR A QA/QC CHECK BY STORES & ENGINEERING PRIOR TO ISSUE.
C. ONCE RIGGING IS FITTED TO LIFT ITEM, A TRIAL LIFT IS TO BE CARRIED OUT ON SITE. THE FOLLOWING WILL BE RECORDED AS A MINIMUM.

ⓐ HOOK HEIGHT FROM DECK TO HOOK.
ⓑ WEIGHT IN AIR.

IDENTIFICATION MARK LEGEND:

TC1034-4001-01-OFF

- OFFSHORE LIFT
- SLING No.
- LAST 4 DIGITS OF DRAWING No.
- PROJECT / SAP No.

REV	DATE	BY	DESCRIPTION	DO CHECKED	CHECKED	APPROVED
C1	15-Nov-10	JohnS	ISSUED FOR CONSTRUCTION	CWS	MSz	SSa
B1	05-NOV-10	KJF	ISSUED FOR CLIENT REVIEW	CWS	MSz	SSa
A1	05-NOV-10	KJF	ISSUED FOR INTERNAL REVIEW	CWS	MSz	SSa

This document, and all information contained herein, is the property of and embodies confidential information of, Subsea 7 (US) LLC and may not be reproduced or disclosed to others or used to manufacture or have manufacture on behalf of others use for any other purpose without the prior written consent of Subsea 7 (US) LLC. This document shall be returned to Subsea 7 (US) LLC on request.

subsea 7
15990 N. BARKER'S LANDING, SUITE 200
HOUSTON, TEXAS 77079

bp

bp MACONDO

JUMPER RECOVERY RIGGING

CLIENT DRAWING NUMBER	CLIENT REV
N/A	N/A

SCALE	SHEET
1:1	1 of 1

DRAWING NUMBER	REV.
TC1034-HED-4001	C1

RIGGING LIST

ITEM	QTY	DESCRIPTION	ROPE GRADE	DIA (in)	DIA (mm)	CONSTRUCTION	LENGTH (ft-in)	LENGTH (mm)	EYE TYPES CRANE	EYE TYPES MANIFOLD	MBL (Te)	WLL (lbs)	WLL (Te)	SINGLE PART WEIGHT (kg)	TOTAL SET WEIGHT (kg)
1	1	SYNTHETIC ROUNDSLING	~	6.00	152	TWIN PATH TPXC 40000	19'-8"	2000	~	~	~	~	10	80.1	
2	1	WIDE BODY SHACKLE	~	2.25	57	CROSBY G-2160	9.38"	238	~	~	~	~	55	227	
3	1	MASTER LINK	~	2.75	70	CROSBY A-342	16"	406.4	~	~	~	~	98.4	87.7	
4	1	SHACKLE	~	2.3	58.4	CROSBY G-2160	7.75"	197	~	~	~	~	55	24	

NOTE: DIAMETER DIMENSION REFERS TO SHACKLE PIN DIAMETER AND LENGTH DIMENSION REFERS TO EFFECTIVE LENGTH

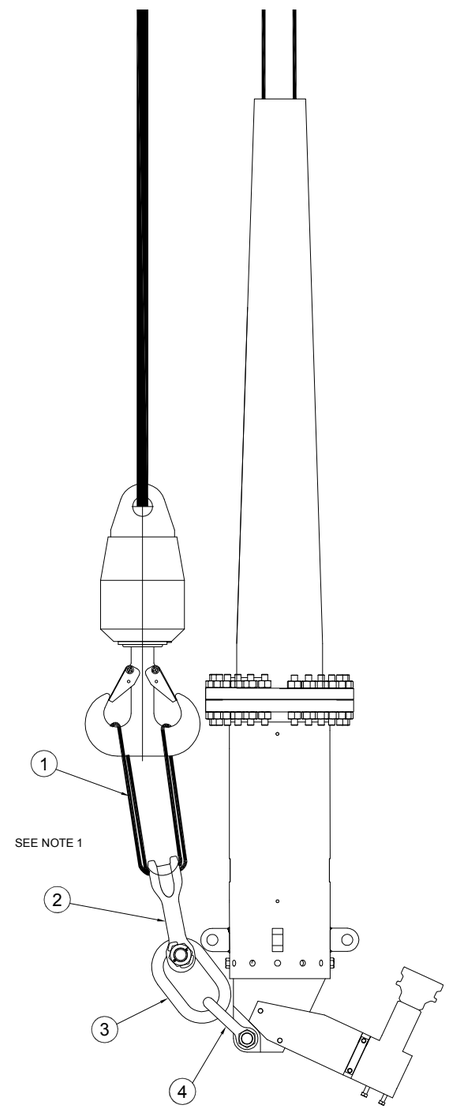

RIGGING NOTES:

1. SUPPLY OF WIRE SLINGS TO COMPLY WITH BS EN 12385-4 OR EQUIVALENT. DOCUMENTATION FOR WIRE SLINGS.
2. WIRE SLING LENGTHS ARE FROM BEARING POINT TO BEARING POINT.
3. ALL SLING ASSEMBLIES TO HAVE I.D. TAG ATTACHED. (RITCHEY TAG OR SIMILAR) SEE TYPICAL I.D. TAG DETAILS THIS DWG.

GENERAL GUIDANCE:

A. ORIGINAL 'CERTIFICATES' TO GO IN 'AS BUILT' CERTIFICATION PACKAGE TO SUBSEA 7 EQUIPMENT DEPT. RIGGING SECTION.
B. ALL RIGGING SHOULD BE EXPEDITED VIA SUBSEA 7 BASE FOR A QA/QC CHECK BY STORES & ENGINEERING PRIOR TO ISSUE.
C. ONCE RIGGING IS FITTED TO LIFT ITEM, A TRIAL LIFT IS TO BE CARRIED OUT ON SITE. THE FOLLOWING WILL BE RECORDED AS A MINIMUM.

ⓐ HOOK HEIGHT FROM DECK TO HOOK.
ⓑ WEIGHT IN AIR.

IDENTIFICATION MARK LEGEND:

TC1034-4003-01-OFF

- OFFSHORE LIFT
- SLING No.
- LAST 4 DIGITS OF DRAWING No.
- PROJECT / SAP No.

REFERENCE DRAWINGS:

TC1034-HED-6003 SURFACE JUMPER RECOVERY WITH SKANDI NEPTUNE

NOTES:

1. ITEMS 2, 3, & 4 WILL ALREADY BE LOCATED ON KICK-OFF SPOOL.

REV	DATE	BY	DESCRIPTION	DO CHECKED	CHECKED	APPROVED
C1	15-Nov-10	JohnS	ISSUED FOR CONSTRUCTION	CWS	MSz	SSa
B1	12-NOV-10	JohnS	ISSUED FOR CLIENT REVIEW	CWS	MSz	SSa
A1	05-NOV-10	KJF	ISSUED FOR INTERNAL REVIEW	CWS	MSz	SSa

This document, and all information contained herein, is the property of and embodies confidential information of, Subsea 7 (US) LLC and may not be reproduced or disclosed to others or used to manufacture or have manufacture on behalf of others use for any other purpose without the prior written consent of Subsea 7 (US) LLC. This document shall be returned to Subsea 7 (US) LLC on request.

subsea 7
15990 N. BARKER'S LANDING, SUITE 200
HOUSTON, TEXAS 77079

bp

bp MACONDO

CRANE RIGGING FOR SURFACE JUMPERS 2ND END OVER VLS

CLIENT DRAWING NUMBER	CLIENT REV
N/A	N/A

SCALE	SHEET
1:1	1 of 1

DRAWING NUMBER	REV.
TC1034-HED-4003	C1

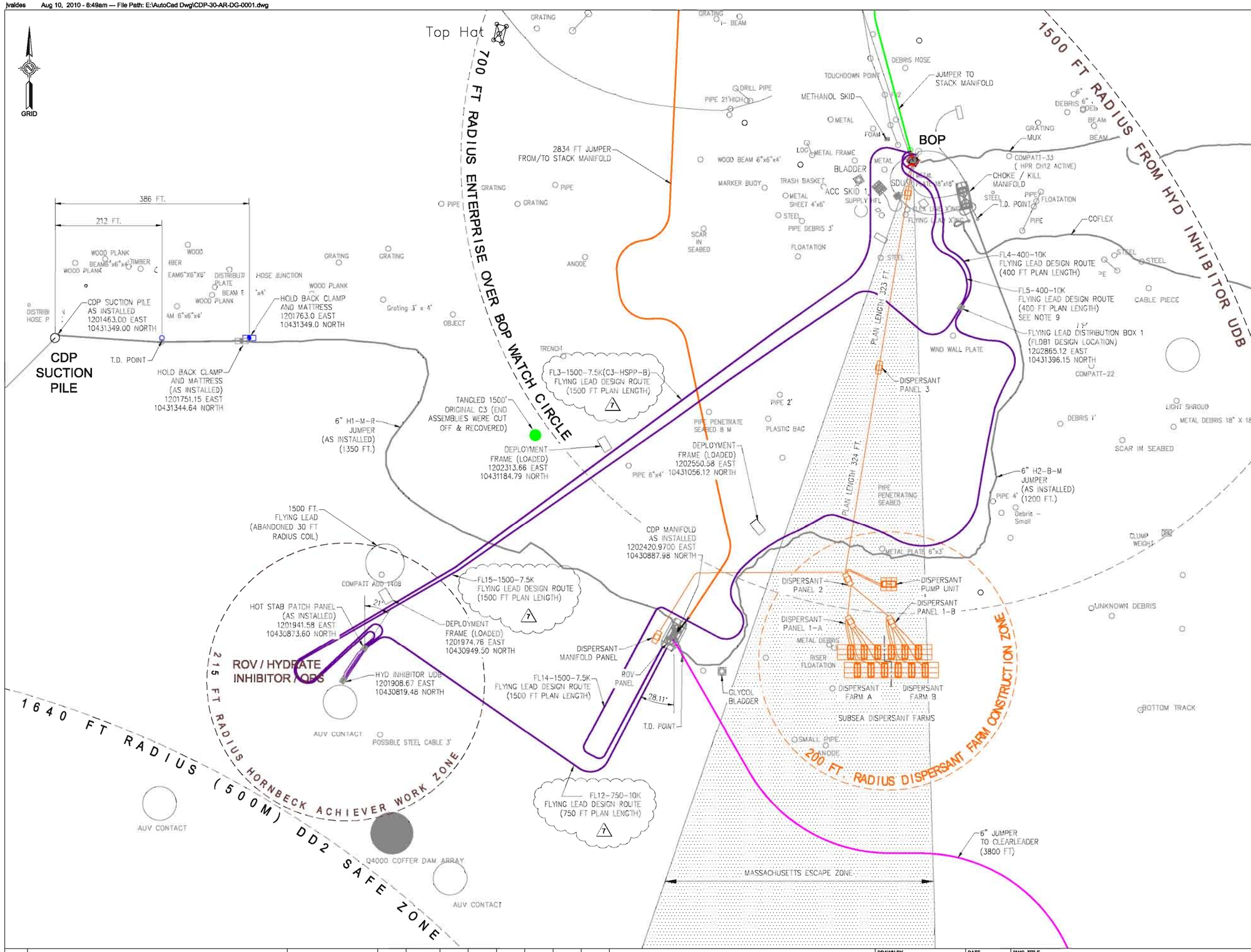

KEY MAP

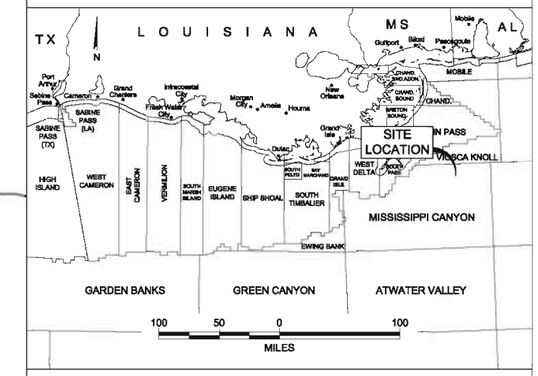

NOTES

1. ASSUMED BOP HUB HEIGHT = 76 FT. FROM MUDLINE.
2. ASSUMED AXIAL FRICTION FACTOR = 0.2
   MINIMUM STABLE LAY RADIUS FOR 6" = 45 FT.
3. MINIMUM 10 FT. STRAIGHT LAY FROM TOUCHDOWN POINT BEFORE STARTING TURN AT CHOKE KILL MANIFOLD / CDP MANIFOLD.
4. JUMPER TO CLEAR LEADER CONNECTS TO CDP MANIFOLD HUB M-H3U (SOUTHERN MOST HUB CLOSEST TO ROV PANEL)
5. 6" JUMPER H2-B-M CONNECTS TO CDP MANIFOLD HUB M-H2U (CENTER HUB ON SOUTHEAST SIDE).
6. DISPERSANT HOSE LENGTH IS 337 FT. FROM THE MOTOR PANEL TO CDP MANIFOLD PANEL.
7. CDP-2 SUCTION PILE DESIGN LOCATION:
   X = 1204302.54 EAST
   Y = 10432556.63 NORTH
   SEE DWG (CDP-30-AR-DG-0004 CDP SUBSEA SITE LAYOUT-CDP-2 JUMPER DESIGN ROUTE.)
8. DISPERSANT PUMP UNIT MOVED TO:
   1202753.11 EAST
   10430968.18 NORTH
9. FL5-400-10K IS INSTALLED WHEN/IF FL3-1500-7.5K IS RELOCATED TO FLDB1.

LEGEND

- 4" FLEXIBLE HOSE
- 6" FLEXIBLE HOSE
- 6" FLEXIBLE HOSE
- 6" FLEXIBLE HOSE
- HYDRATE INHIBITOR FLYING LEADS
- CONTAINMENT PHASE 1 LINES
- SUBSEA CONTACT

GEODETIC DATA

PROJECTION:	UTM	DATUM:	NAD 27
ZONE:	16 N	CENTRAL MERIDIAN:	93° W
SPHEROID:	CLARKE 1866	GRID UNITS:	US SURVEY FEET

35 0 70 140 210 280 350
FEET

NO.	REFERENCE DRAWING TITLE	REF. DWG. NO.	REV	DATE	BY	DC	ENG	CE	PM	CLIENT	DESCRIPTION
			7	08/09/10	JV	GC	SST	MP	PG	BP	REVISED AS NOTED
			6	07/27/10	GFC	JV	MP	PG	WG	BP	REVISED PER MOC CDP-056
			5	07/13/10	LFR	JV	AS	PG	WG	BP	REVISED AS NOTED (NOTE 8)
			4	07/05/10	LFR	JV	TF	PG	WG	BP	REVISED AS PER OPS NOTE #2 PROC 4164
			3	06/26/10	BS	BS	TS	PG	WG	BP	REVISED PER MOC CDP-024

DRAWN BY: L. RODRIGUEZ	DATE: 5/20/10
ENGINEER: C. PAPP	DATE: 06/05/10
PROJECT ENGINEERING MANAGER: R. BERGER	DATE: 06/05/10
SCALE AT 17"-SIZE: 1" = 70'	

DWG. TITLE

CONTAINMENT AND DISPOSAL PROJECT
CDP-1 & HIS
SUBSEA SITE LAYOUT

CLIENT: bp

CAD No. CDP-30-AR-DG-0001	JOB No. -
DWG No. CDP-30-AR-DG-0001	REV. 7

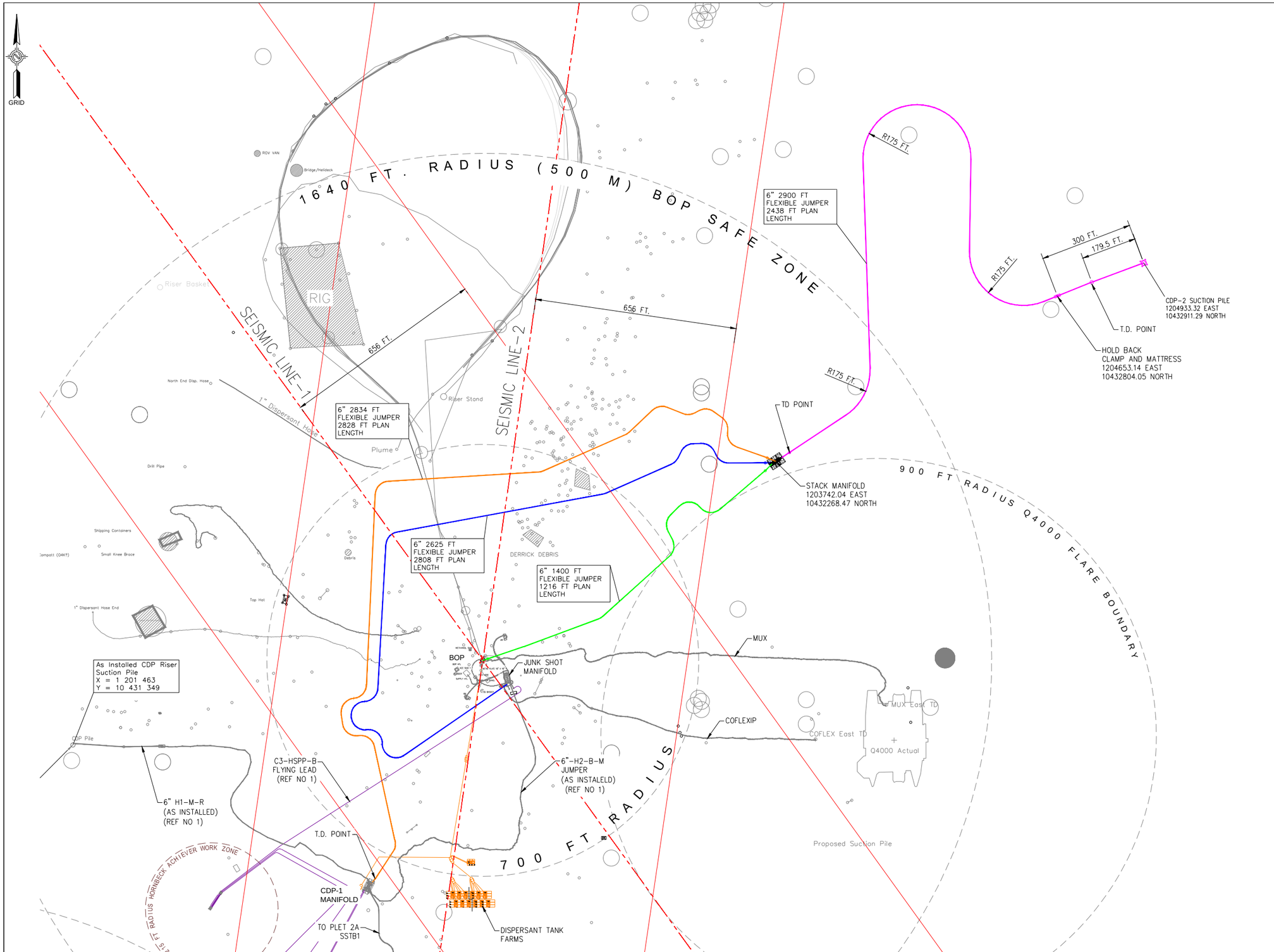

KEY MAP

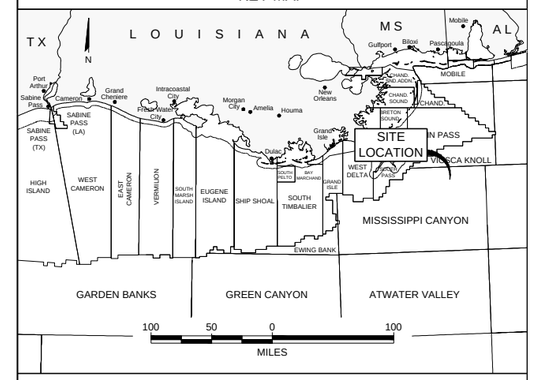

NOTES

1. ASSUMED BOP HUB HEIGHT = 90 FT. FROM MUDLINE.
2. ASSUMED AXIAL FRICTION FACTOR = 0.2
   MINIMUM STABLE LAY RADIUS FOR 6" = 45 FT. UNO.
3. CDP-2 SUCTION PILE DESIGN LOCATION:
   1204933.32 EAST
   10432911.29 NORTH

LEGEND

- 6" FLEXIBLE HOSE
- 6" FLEXIBLE HOSE
- 6" FLEXIBLE HOSE
- 6" FLEXIBLE HOSE
- HYDRATE INHIBITOR FLYING LEADS
- CONTAINMENT PHASE 1 LINES
- SUBSEA CONTACT

GEODETIC DATA

PROJECTION:	UTM	DATUM:	NAD 27
ZONE:	16 N	CENTRAL MERIDIAN:	93ÃW
SPHEROID:	CLARKE 1866	GRID UNITS:	US SURVEY FEET

75 0 150 300 450 600
FEET

NO.	REFERENCE DRAWING TITLE	REF. DWG. NO.	REV	DATE	BY	DC	ENG	CE	PM	CLIENT	DESCRIPTION
1	CDP-1 SUBSEA SITE LAYOUT	CDP-30-AR-DG-0001	0	07/19/10	LFR	BS	JD	RB	WG	BP	ISSUED FOR CONSTRUCTION

DRAWN BY	L. RODRIGUEZ	DATE	06/24/10
ENGINEER	J DAY	DATE	07/19/10
PROJECT ENGINEERING MANAGER	W GREENE	DATE	07/19/10
SCALE AT 'D'-SIZE	1" = 150'		

DWG. TITLE

CONTAINMENT AND DISPOSAL PROJECT
SUBSEA SITE LAYOUT
CDP 2 JUMPER DESIGN ROUTE
SHEET 1 OF 2

CLIENT: bp

CAD No. SHEET 1 OF 2

JOB No.

DWG No. CDP-30-AR-DG-0004

REV. 0

bp	Project Title: VENDOR: PURCHASE ORDER No:	**FORM IRN** **IRN-ISAB1-012**
INSPECTION RELEASE NOTE		Shipping Manifest Number:

Equipment Tag Number: Project to Assign	Vendor part number:	Vendor serial number:
Equipment Description:		
Vendor Location:		
Factory Acceptance Test Procedure Document Number:		
Vendor Manufacturing Data Book Completed including Inspection & Test Certificates and preservation where required: YES / NO		
IF No, Expected Completion Date of Vendor Manufacturing Data Book:		
Vendor Manufacturing Data Book Document Number:		
Write Vendor Document delivery address here :		
List Applicable Concession Requests:		

A PUNCH LIST PER DISCIPLINE, DETAILING OUTSTANDING ITEMS MUST BE ATTACHED
(If the activity of punchlisting produces no outstanding items then the Inspector and Vendor to sign "No Items" and attach punchlist to this form.

A SIGNED COPY OF THIS FORM AND THE PUNCHLISTS SHOULD ACCOMPANY THE EQUIPMENT TO SITE.

ORIGINALS TO BE FILED IN THE GOC SYSTEM HANDOVER CERTIFICATION PACKAGE

Vendor Punchlists Process Completed & Attached: Applicable? YES / NO Attached? YES / NO

VENDOR AUTHORITY

I HEREBY CONFIRM THAT THE ABOVE SYSTEM AS SPECIFIED, HAS BEEN FABRICATED, TESTED AND DELIVERED IN FULL ACCORDANCE WITH THE PURCHASE ORDER AND FUNCTIONAL SPECIFICATION/DESIGN DRAWINGS, INCLUSIVE OF ALL VENDOR DOCUMENT REQUIREMENTS AND PUNCHLISTS SUPPLIED DETAILING ANY OR NO OUTSTANDING ISSUES AS APPLICABLE.

Print _____ **SIGNED** _____ **DATE** _____

Tel _____ Email _____

COMPANY REPRESENTATIVE

I HEREBY CONFIRM THAT THE ABOVE SYSTEM AS DEFINED, HAS BEEN TESTED IN ACCORDANCE WITH THE FAT SPECIFICATION AND/OR DESIGN DRAWINGS AND PUNCHLISTED DETAILING ANY OR NO OUTSTANDING ISSUES AS APPLICABLE.

Print _____ **SIGNED** _____ **DATE** _____

Tel _____ Email _____

CONSTRUCTION/ INSTALLATION AUTHORITY

I HEREBY ACCEPT / CONFIRM EQUIPMENT HAS BEEN DELIVERED WITH / WITHOUT TRANSPORTATION DAMAGE AND IS ACCEPTABLE FOR USE ON SITE.

MANIFEST CORRECT YES / NO

Print _____ **SIGNED** _____ **DATE** _____

Tel _____ Email _____

(C) BP Exploration All Rights Reserved

Appendix 4: Recovery Tables and Squeeze Calculations

Static Analysis Results of Jumper Lift FSR1 (Macondo Jumpers (1060 ft without Buoyancy) at 1520 m WD)

Step No	Description	Total crane wire length	Crane wire paid in	Jumper arc length to touchdown	Vessel displacement	Layback	Top Declination	Effective Tension at		MBR	Bending moment at bend restrictor
								Crane Tip	Touch Down		
		m	m	m	m	m	Deg	kN	kN	m	kNm
1	Initial Position	1548	~	5	~	42.2	0.4	313.4	2.1	4.6	3.7
2	Pay in crane wire 75m	1473	75	93	~	130.5	1.9	376.7	12.7	16.1	1.1
3	Move Vessel 50m	1473	~	84	50	72.1	1.0	368.7	6.3	9.4	1.8
4	Pay in crane wire 25m	1448	25	114	~	101.6	1.5	389.7	10.1	13.3	1.3
5	Move Vessel 25m	1448	~	110	25	72.4	1.0	385.8	6.8	9.9	1.8
6	Pay in crane wire 25m	1423	25	139	~	102.2	1.5	406.9	10.8	14.0	1.2
7	Move Vessel 25m	1423	~	135	25	72.8	1.0	402.8	7.2	10.3	1.7
8	Pay in crane wire 25m	1398	25	165	~	102.6	1.5	424.1	11.4	14.7	1.2
9	Move Vessel 25m	1398	~	160	25	73.0	1.0	419.8	7.6	10.7	1.6
10	Pay in crane wire 25m	1373	25	190	~	103.0	1.6	441.2	12.0	15.3	1.1
11	Move Vessel 25m	1373	~	186	25	73.4	1.0	436.8	8.0	11.1	1.6
12	Pay in crane wire 25m	1348	25	216	~	103.4	1.6	458.3	12.5	15.8	1.1
13	Move Vessel 25m	1348	~	211	25	73.6	1.1	453.8	8.3	11.4	1.5
14	Pay in crane wire 25m	1323	25	241	~	103.8	1.6	475.4	12.9	16.3	1.1
15	Move Vessel 25m	1323	~	236	25	73.8	1.1	470.7	8.6	11.8	1.5
16	Pay in crane wire 25m	1298	25	267	~	104.2	1.6	492.5	13.4	16.8	1.0
17	Move Vessel 25m	1298	~	261	25	74.0	1.0	487.6	8.9	12.0	1.4
18	Pay in crane wire 25m	1273	25	292	~	104.6	1.6	509.5	13.8	17.2	1.0
19	Move Vessel 25m	1273	~	287	25	74.2	1.0	504.5	9.1	12.3	1.4
20	Pay in crane wire 25m	1248	25	317	~	104.9	1.5	526.5	14.2	17.6	1.0
21	Move Vessel 25m	1248	~	312	25	74.5	1.0	521.4	9.4	12.5	1.4

Static Analysis Results of Jumper Lift FSR2 (Macondo Jumpers (1060 ft with Buoyancy) at 1520 m WD)

Step No	Description	Total crane wire length	Crane wire paid in	Jumper arc length to touchdown	Vessel displacement	Layback	Top Declination	Effective Tension at		MBR	Bending moment at bend
								Crane Tip	Touch Down		
		m	m	m	m	m	Deg	kN	kN	m	kNm
1	Initial Position	1550	~	5	~	69.8	0.7	314.7	4.0	5.4	3.2
2	Pay in crane wire 100m	1450	100	141	~	178.6	1.7	326.4	9.6	12.5	1.4
3	Move Vessel 50m	1450	~	138	50	125.6	1.0	323.4	5.5	7.3	2.4
4	Pay in crane wire 50m	1400	50	170	~	157.8	2.0	342.1	11.8	15.1	1.1
5	Move Vessel 25m	1400	~	165	25	127.6	1.5	337.4	8.9	12.1	1.4
6	Pay in crane wire 25m	1375	25	195	~	157.6	2.2	358.8	13.7	17.1	1.0
7	Move Vessel 25m	1375	~	190	25	127.4	1.7	354.0	10.5	13.7	1.3
8	Pay in crane wire 25m	1350	25	221	~	158.2	2.3	376.1	15.3	18.9	0.9
9	Move Vessel 25m	1350	~	215	25	128.0	1.8	371.3	11.8	15.1	1.2
10	Pay in crane wire 25m	1325	25	246	~	159.0	2.4	393.7	16.7	20.4	0.9
11	Move Vessel 50m	1325	~	236	50	99.0	1.4	384.4	9.4	12.6	1.4
12	Pay in crane wire 25m	1300	25	267	~	129.4	2.0	406.1	13.9	17.3	1.0
13	Move Vessel 25m	1300	~	262	25	99.4	1.4	401.6	10.2	13.3	1.3
14	Pay in crane wire 25m	1275	25	292	~	130.0	2.0	423.5	14.8	18.3	1.0
15	Move Vessel 25m	1275	~	287	25	100.0	1.5	418.8	10.8	14.0	1.2
16	Pay in crane wire 25m	1250	25	318	~	130.9	2.0	440.8	15.6	19.0	0.9
17	Move Vessel 25m	1250	~	313	25	100.5	1.5	436.0	11.4	14.6	1.2

Calculation of required squeeze pressure for tensioner mark II

Only green fields can be edited

Project name	BP Macondo - 245.1mm OD Flexible

geometry

Pipe OD	OD=	**245**	[mm]
Compression of pipe on diameter	comp=	3	[mm]
Pad type (see Pad overview (2))		003	[-]
Tensioner number (Pad overview)		003	[-]
	GOM VLS		
Pad height	Hpad=	137	[mm]
Pad angle	αpad=	140.0	[deg]
Pad mass	Mpad=	18.0	[kg]
Number of pads	Npads=	64	[-]
Minimum pipe OD	OD min=	190	[mm]
Maximum pipe OD	OD max=	270	[mm]
Position of tensioner (90° = vertical)	θtensioner=	90.0	[deg]
Cylinder Bore Diameter	Dbore=	170	[mm]
Hydraulic Area Bore	Abore=	22698	[mm²]
Pressure window	pw=	5%	[%]
Min. pressure window	pw_min	5	[bar]
Contact length	L=	3.80	[m]
Cylinders per track	N=	2	[-]

Loads

Product static load	Ft1=	400	[kN]
Number of tensioners	Ntens=	1	[-]
Dynamic factor	DAF=	1.25	[-]
Tensioner dynamic load	Ft2=	500	[kN]
Allowable squeeze for product	Fsq,all2=	500	[kN/m/track]
Vessel acceleration Ax (> 0)	Ax	1.00	[m/s²]
Vessel acceleration Az (> 0)	Az	1.00	[m/s²]
Friction coefficient	m=	0.10	[-]
Safety factor to slip	s.f. =	1.25	[-]
Total squeeze load	Fsq=	6250	[kN]
Number of tracks	n=	4	[-]
Squeeze load per track	Fsq track=	1563	[kN/track]
Required squeeze pressure	Qsq=	412	[kN/m/track]
Adjusted squeeze pressure	Qsq=	412.0	[kN/m/track]

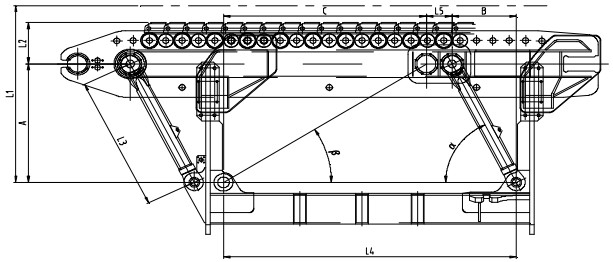

Geometry inputs

l1	[mm]	1738
l2	[mm]	405
l3	[mm]	1293
l4	[mm]	2614
l5	[mm]	230
l6	[mm]	0
l7	[mm]	0
deformation pads [mm]		5

Allowable loads

Allowable squeeze for pad	Fsq,all=	550	[kN/m/track]
Allowable squeeze load per track	Fsq,all track=	550	[kN/m/track]
Tensioner drive system SWL	SWL=	550	[kN]
Tensioner SWL as function of friction	SWL=	501	[kN]
SWL reverse	SWL, rev=	-150	[kN]

Checks

Product OD =	245.1 mm		OD within pad range from 190 to 270 mm	OK
Tensioner max. squeeze =	453 kN/m/track	<	550 kN/m/track = allowable squeeze load for pad	OK
Tensioner max. squeeze =	453 kN/m/track	<	550 kN/m/track = allowable squeeze load for track	OK
Tensioner min. squeeze =	412 kN/m/track	>	100 kN/m = minimum regulatable squeeze load	OK
Product max. squeeze =	453 kN/m/track	<	500 kN/m/track = allowable squeeze load for product	OK
Adjusted squeeze load =	412 kN/m/track	>	412 kN/m/track = required squeeze load	OK
Tensioner load =	500 kN		Tensioner load within range from -150 kN to 501 kN	OK
Squeeze pressure =	197.3 bar	>	20 bar = minimum squeeze pressure	OK
Safety factor to slip =	1.25	>	1.00 = min. req. safety to slip	OK

pipe OD	outer diameter product
Hpad	pad height
A	height parallel arm
B	distance along parallel arm
C	distance along cylinder
α	angle between centerline and parallel arm
β	angle between center line and cylinder

squeeze cylinder

A [mm]	α [deg]	B [mm]	C [mm]	β [deg]	Lcyl [mm]	Fcyl [kN]	p1 [bar]
1072	56.0	723	1661	32.8	1976	438	**193**

own mass

M track [kg]	M pads [kg]	delta Fcyl [kN]	p31 [bar]	p32 [bar]	p3 [bar]
7150	1149	38	17	1	**18**

tension

delta Fcyl [kN]	p2 [bar]
52	**23**

SUMMERY

required SQUEEZE PRESS	
p_{sq}	[bar]
	197.3

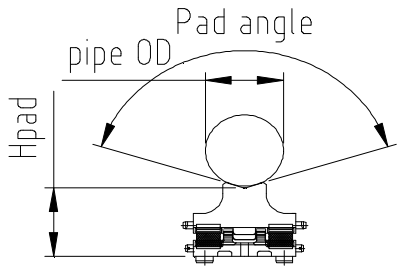

Resulting settings

High Alarm Set Point 3	[bar]	217.0
Low Alarm Set Point 4	[bar]	177.5
Approx Dial Setting	[-]	680.2
Approx Track Position	[mm]	123
Accumulator Pre-Charge		
Min	[bar]	65.8
Max	[bar]	98.6

Appendix 5: 3rd Party Procedures

Document Title	Document Number
DBM Installation/Handling Procedure	SK-W9674-EN-012, Rev 01
Uraduct Installation Manual	-
Vertebrae Assembly Procedure	A1014901
Friction Clamp Protection Assembly Procedure	HO-W6226-EN-002, Rev 01
Equipment Demobilization Evidence Preservation and Tracking Procedure	2200-T2-DO-PR-4831

BP

Maconda CDP Project

Distributed Buoyancy Modules Installation, Storage and Handling Procedure

Document No. SK-W9674-EN-012, Rev 01

Confidentiality Statement

This document contains confidential information.
All rights (including copyright, confidential information, trade secrets and design rights) are owned by Trelleborg Offshore UK Ltd. No use or disclosure is to be made without prior written permission of Trelleborg Offshore UK Ltd. Copyright 2010 Trelleborg Offshore UK Ltd. All rights reserved.

Trelleborg Offshore UK Ltd
Stanley Way, Stanley, Skelmersdale, Lancashire, WN8 8EA, England
Tel: +44 (0) 1695 712000 Fax: +44 (0) 1695 712111 www.trelleborg.com

Revision List

Rev No	Issue Date	Prepared		Checked		Approved	
		Name	Sign	Name	Sign	Name	Sign
01	28/05/10	R Hogarth	R. Hogarth	A Maqbool	AM	J Harrison	Jason Harrison.

This document contains confidential information. All rights (including copyright, confidential information, trade secrets and design rights) are owned by Trelleborg Offshore UK Ltd. No use or disclosure is to be made without prior written permission of Trelleborg Offshore UK Ltd. Copyright 2010 Trelleborg Offshore UK Ltd. All rights reserved.

Table of Contents

1 Introduction 4
2 References 5
3 Drawings 6
3.1 Buoyancy Element and Clamp Drawings 6
3.2 Ancillaries 6
4 Hydraulic Tool & Ancillaries 7
5 General Arrangement 8
5.1 Internal Clamp 8
5.2 Buoyancy Element 9
6 Handling Guidelines 10
6.1 General Requirements 10
6.2 Internal Clamps 11
6.3 Buoyancy Elements 11
6.4 Buoyancy Element Disassembly 12
7 Storage 13
8 Internal Clamp Installation 14
8.1 Pre-Assembly Checks 14
8.2 Crossbar Clearance Measurement Check 15
9 Internal Clamp Removal 16
10 Buoyancy Element Installation 16
11 Buoyancy Element Removal 17

Appendix A – Internal Clamp Installation 18
Appendix B – Internal Clamp Removal 28
Appendix C – Buoyancy Element Installation 33

This document contains confidential information. All rights (including copyright, confidential information, trade secrets and design rights) are owned by Trelleborg Offshore UK Ltd. No use or disclosure is to be made without prior written permission of Trelleborg Offshore UK Ltd. Copyright 2010 Trelleborg Offshore UK Ltd. All rights reserved.

1 Introduction

BP have placed an order with Trelleborg Offshore UK Ltd (TOUK) for the design, manufacture & supply of Distributed Buoyancy Modules c/w internal clamps & handling straps for their Maconda CDP Project.

The purpose of this document is to present the installation, storage and handling procedure for the internal clamps and the buoyancy elements associated with all design types.

PLEASE NOTE: **The procedural information given in this document is for guidance only, the final method of assembly is to be determined by the installation contractor.**

This document contains confidential information. All rights (including copyright, confidential information, trade secrets and design rights) are owned by Trelleborg Offshore UK Ltd. No use or disclosure is to be made without prior written permission of Trelleborg Offshore UK Ltd. Copyright 2010 Trelleborg Offshore UK Ltd. All rights reserved.

2 References

The following documents have been referenced in this report: -

Ref. 1	Trelleborg Offshore UK Ltd.	Internal Clamp Design Report [TBC]
Ref. 2	Trelleborg Offshore UK Ltd.	Buoyancy Element Design Report [TBC]
Ref. 3	Trelleborg Offshore UK Ltd.	Hydraulic Tool Operating Manual 1005-PR-018

This document contains confidential information. All rights (including copyright, confidential information, trade secrets and design rights) are owned by Trelleborg Offshore UK Ltd. No use or disclosure is to be made without prior written permission of Trelleborg Offshore UK Ltd. Copyright 2010 Trelleborg Offshore UK Ltd. All rights reserved.

3 Drawings

3.1 Buoyancy Element and Clamp Drawings

DWG NO	DRAWING TITLE
C433535	Internal Clamp Body
C433536	Internal Clamp Strap
C433537	Internal Clamp Fastener
C433538	Internal Clamp General Arrangement
C433540	Element External Shell
C433541	Element Securing Strap
C433542	General Arrangement
TBC	Packing Arrangement

Table 3-1

3.2 Ancillaries

3.2.1 Clamp Installation tools

DWG NO	DRAWING TITLE
B418603	M24 Locknut Spanner
B418610	M24 Driver

Table 3-2

3.2.2 Element Installation tools

DWG NO	DRAWING TITLE
B418614	M12 Locknut Spanner
B418618	M12 Driver

Table 3-3

This document contains confidential information. All rights (including copyright, confidential information, trade secrets and design rights) are owned by Trelleborg Offshore UK Ltd. No use or disclosure is to be made without prior written permission of Trelleborg Offshore UK Ltd. Copyright 2010 Trelleborg Offshore UK Ltd. All rights reserved.

4 Hydraulic Tool & Ancillaries

The hydraulic tool comprises a strongback supporting a hydraulic ram at one end and a fixed anvil at the other. To these are attached jaw bodies, suitable for set distances between clamp fasteners. Individual jaws fixed on the jaw bodies provide an interface with the correct diameter of cross bar. Refer to 1005-PR-018 (Ref. 3) for the Operating Manual for the Hydraulic Tool.
All of the internal clamps have a 1-part strap which requires the use of only one hydraulic tool. The installations will be carried out with a 20 te capacity tensioning tool.
The tools provided are:

1. Air-driven Hydraulic Power Pack – See 1005-PR-018 for details.
2. 20 Te Capacity Hydraulic Tensioning Tool
3. Fixed Jaw Bodies
4. Moving Jaw Bodies
5. Jaw End Effectors
6. Locknut Latch Mechanisms
7. Calibration Bars
8. Hydraulic Hoses.

The types of ancillaries required are as follows.

Clamp Component	SPECIFICATION
Fixed Jaw Body	M24-185-Fnnn
Left Hand Fixed Jaw	M24-50-FLH-nnn
Right Hand Fixed Jaw	M24-50-FRH-nnn
Moving Jaw Body	M24-185-Mnnn
Left Hand Moving Jaw	M24-50-MLH-nnn
Right Hand Moving Jaw	M24-50-MRH-nnn
Calibration Bar	50-245

Table 4-1

These are designed to suit the following strap/crossbar/fastener configuration:

- M24 x 180mm fasteners
- Ø50mm Crossbars, 245mm Long, 185mm Hole Centres

Note: In, Table 4-1“nnn” represents serial numbers for traceability purposes.

The calibration bars serve two purposes, firstly to act as a spacer between the jaws when setting the power pack relief valve, and secondly to align the Locknut Latch Mechanisms.

This document contains confidential information. All rights (including copyright, confidential information, trade secrets and design rights) are owned by Trelleborg Offshore UK Ltd. No use or disclosure is to be made without prior written permission of Trelleborg Offshore UK Ltd. Copyright 2010 Trelleborg Offshore UK Ltd. All rights reserved.

5 General Arrangement

Each buoyancy module is assembled from two discrete components:-

1. Internal clamp
2. Buoyancy element(s)

5.1 Internal Clamp

The function of the internal clamp is to fix the position of the buoyancy module on the riser. It achieves this by transferring the circumferential load in the strap into a radial load which bears onto the riser.

The internal clamp is assembled from the following items:-

1. Clamp body
2. Securing strap
3. Securing strap fasteners

The clamp body is a segmented annular spacer that bears directly onto the riser external sheath. The outer surface of the body is provided with a groove into which the securing strap is accommodated.

The securing strap is a flat circumferential band, the free ends of which are fitted with a transverse cross bar. These cross bars are drawn together by a set of fasteners. Particulars for the internal clamps are given in Table 5-1.

Line Designation	No. of Segments	Strap Details	X-Bar Details	Fastener Details	Clamp Weight
Ø245.1mm Riser	4	125 x 3.5mm	Ø50 x 245mm	M24 x 180 Long	30.1 kg

Table 5-1

This document contains confidential information. All rights (including copyright, confidential information, trade secrets and design rights) are owned by Trelleborg Offshore UK Ltd. No use or disclosure is to be made without prior written permission of Trelleborg Offshore UK Ltd. Copyright 2010 Trelleborg Offshore UK Ltd. All rights reserved.

5.2 Buoyancy Element

The function of the buoyancy element is to impart an up-thrust to the riser in order to hold the line in the desired orientation. The element is buoyant by virtue of the fact that a material (syntactic foam) which has a specific gravity of less than 1.0 occupies its core.

The buoyancy element is assembled from the following items:-

1. Element halves
2. Securing straps
3. Tensioning assemblies

The buoyancy element is cylindrical in shape but is split into two identical halves so as to allow the unit to be fitted around the riser.

The internal geometry of each half is also provided with a recess that allows engagement with the internal clamp. Two longitudinal holes are present in each half and these may be used for handling and lifting the component.

The external surface of the element is provided with a set of circumferential recesses. It is into these recesses that the securing straps are fitted. The free ends of these straps are drawn together by a tensioning assembly.

The principal particulars for the buoyancy elements are shown in Table 5-2.

Line Designation	Element Height	Element Diameter	Element Weight*	No. of Straps	Tensioner Size	Module Weight**
Ø245.1mm Riser	1085 mm	Ø1270 mm	308.2 kg	2	M12	652.9 kg

Table 5-2

NOTE:-

*Element weight = 1 Half Shell
**Module Weight = 2 No. Half Shell plus clamp, strap and fasteners

This document contains confidential information. All rights (including copyright, confidential information, trade secrets and design rights) are owned by Trelleborg Offshore UK Ltd. No use or disclosure is to be made without prior written permission of Trelleborg Offshore UK Ltd. Copyright 2010 Trelleborg Offshore UK Ltd. All rights reserved.

6 Handling Guidelines

6.1 General Requirements

The polyethylene skin of the buoyancy element is a relatively tough material but it can be subject to abrasion against hard rough surfaces. Minor surface damage will not impair the function of the element but it should be avoided. The element and internal clamp should be handled by fork truck with the forks bearing directly onto the shell or wooden skids provided, minimising any dragging or pushing.

The element and internal clamp should not be dropped or handled roughly as this may damage the syntactic foam interior or the internal clamp (without any apparent external damage).

The guidelines for handling of the buoyancy Element and Clamp are summarised below: -

DO:-

1. Lift the element and internal clamp one at a time unless using a purpose built spreader bar.
2. Pull horizontally by soft slinging around the circumference of the element.

DO NOT:-

1. Disassemble until required for installation.
2. Allow the element and internal clamp to be dropped onto or be 'bumped' into hard or protruding objects.
3. Roll element and internal clamp around the ground (this may damage the element and internal clamp).
4. Subject to excessive loadings - do not stack more than two high.
5. Use grappling hooks in the securing straps or lift by these straps or the securing strap tensioning assemblies.
6. Lift the element and internal clamp through their internal bore.

Safety Note!

The element skin (polyethylene) is very "slippery". Always ensure the elements are well secured prior to transportation.

This document contains confidential information. All rights (including copyright, confidential information, trade secrets and design rights) are owned by Trelleborg Offshore UK Ltd. No use or disclosure is to be made without prior written permission of Trelleborg Offshore UK Ltd. Copyright 2010 Trelleborg Offshore UK Ltd. All rights reserved.

6.2 Internal Clamps

1. The clamp body is manufactured from an epoxy composite. Avoid impact loads as this may chip the component. Handle with due care at all times.

2. Handle the strap fasteners with care so as to avoid damage to the thread form.

3. When opening the clamp to fit over the riser avoid over extending as this may deform the securing strap.

4. Ensure that the clamp assembly remains clean. Contamination of the thread forms with foreign material may inhibit the proper tensioning of the clamp.

5. Do not under any circumstances apply lubricants to any clamp components other than the material supplied by Trelleborg specifically for this purpose.

6. Tension fasteners and locknuts with titanium tools.

7. Do not fully tension the clamp fasteners using air driven tools.

8. Do not remove the locking nuts from the fasteners.

6.3 Buoyancy Elements

1. The buoyancy element contains a syntactic foam core. So as to prevent internal damage avoid impact loadings and handle with due care at all times.

2. Each buoyancy element half is provided with 2 No ∅30 mm longitudinal openings to assist with the lifting and handling of the components.

3. Handle the tensioning assemblies with care so as to avoid damage to the thread forms.

4. The tensioning assemblies are manufactured from super duplex stainless steel. Avoid contact with carbon steel. Do not lubricate other than with the material supplied by Trelleborg.

5. Apply the specified torque to the tensioning assemblies using the tools supplied. The use of air driven tools is not recommended.

6. Do not disassemble tensioning assemblies unless absolutely necessary. It should be possible to fit straps and engage the tensioner without doing so.

7. Ensure that securing straps do not come into contact with corrosive liquids (e.g. oils, acids etc).

This document contains confidential information. All rights (including copyright, confidential information, trade secrets and design rights) are owned by Trelleborg Offshore UK Ltd. No use or disclosure is to be made without prior written permission of Trelleborg Offshore UK Ltd. Copyright 2010 Trelleborg Offshore UK Ltd. All rights reserved.

6.4 Buoyancy Element Disassembly

The buoyancy modules are supplied in two parts, internal clamps and buoyancy elements. The elements are normally in pairs on skids with the element securing straps and tensioning assembly holding them together. The internal clamp is contained in the element's internal recess. Before the element can be fitted to the riser it must be disassembled into its component parts. When doing so the procedure below should be employed.

1. Cut the plastic bands that secure the buoyancy module to the transportation skids.

2. Remove the buoyancy element from the transportation skids.

3. Remove the element securing straps and tensioning assembly from around the buoyancy element.

4. Carefully separate the two element halves. When the elements are separated enough to allow access to the clamp, the clamp should be secured and lifted out.

5. The buoyancy module is now ready for final assembly.

This document contains confidential information. All rights (including copyright, confidential information, trade secrets and design rights) are owned by Trelleborg Offshore UK Ltd. No use or disclosure is to be made without prior written permission of Trelleborg Offshore UK Ltd. Copyright 2010 Trelleborg Offshore UK Ltd. All rights reserved.

7 Storage

The polymer materials, which form the buoyancy elements and the internal clamps, are relatively chemically inert, and the metal components are very resistant to corrosion. However, whilst in storage the buoyancy element and internal clamp should not be allowed to come into contact with chemical agents and especially acids, strong alkalis or synthetic oils etc.

The buoyancy element and internal clamp must be stored away from naked flames and strong heat sources, which may severely damage the polymer skin and syntactic, foam interior. The maximum temperature allowable is 45 °C.

The buoyancy element and internal clamp should be covered from direct sunlight when in storage or when awaiting assembly.

To prevent excessive heat build-up the cover should be well ventilated.

The buoyancy element may be stacked up to two high without damage. However, for safety reasons and to prevent damage, stacked elements should be well secured to prevent any movement.

The storage guidelines are summarised below.

	DO:-		**DO NOT:-**
1	Store the buoyancy Element and internal clamp on the transportation skids provided.	1	Place near naked flames.
2	Store under cover.	2	Place near heat sources.
		3	Allow contact with chemicals especially strong alkalis, acids or synthetic oils etc.
		4	Expose to sunlight.
		5	Stack more than two high.

Safety Note!

The element skin (polyethylene) is very ‘slippery’. Always ensure the elements are well secured prior to transportation.

NOTE:-

1. Storage covers are outside of the Trelleborg Scope of Supply.

This document contains confidential information. All rights (including copyright, confidential information, trade secrets and design rights) are owned by Trelleborg Offshore UK Ltd. No use or disclosure is to be made without prior written permission of Trelleborg Offshore UK Ltd. Copyright 2010 Trelleborg Offshore UK Ltd. All rights reserved.

8 Internal Clamp Installation

The internal clamps are to be installed using 1 No. hydraulic tool. Refer to 1005-PR-018, (Ref. 3), for operating instructions. The installation procedure is detailed in Appendix A – Internal Clamp Installation.

The illustrations and description given refer to a vertical installation procedure for the assembly of the internal clamps around the riser. These are guidelines only. The clamps may be installed onto a riser which is at an angle offset from vertical. In this orientation the hydraulic tensioning tool must be slung so that it is offered up square to the internal clamps.

IMPORTANT : the tensioning tool must be slung in such a manner that no secondary loads (eg. resulting from vessel wave motion etc.) are imparted to the internal clamp and riser during installation. Failure to do so may result in irreparable damage to the clamp and / or riser. Trelleborg suggest use of a bungee sling or similar to accommodate any potential movement of the tool relative to the riser / clamp. It is the installation contractors' responsibility to review and implement an installation procedure which satisfies these criteria.

The pertinent points described in the guidelines should be adopted whatever the installation method. The final method of assembly is outside Trelleborg's supply and as such the actual assembly, installation procedure and sequence adopted is the responsibility of the Installation Contractor.

8.1 Pre-Assembly Checks

When the internal clamp has been removed from the surrounding buoyancy element conduct the following before installing.

1. Confirm that the internal clamp is of the correct type. Refer to project specific marking stencilled on to the clamp body which refer to the project number and line designation.
2. Visually examine the clamp and ensure that it has not sustained any damage.
3. Ensure that the appropriate tools are available.
4. Dis-engage 2 No. fasteners from the cross bar so that the clamp may be opened.
5. Run the locking nuts up the fasteners so that the protruding thread is equal to the strap crossbar diameter.
6. Examine the fastener threads and area under the fastener head and nuts and ensure that they are adequately lubricated. Re-apply lubricant (Molykote D paste) liberally if required.

NOTES:

1. The internal clamps must be installed using titanium tooling.
2. Torquing of internal clamp fasteners is to be conducted with the aid of calibrated torque wrenches. Torque wrenches are not a Trelleborg supplied item. However, Trelleborg do recommend the use of dial indicator type wrenches.

This document contains confidential information. All rights (including copyright, confidential information, trade secrets and design rights) are owned by Trelleborg Offshore UK Ltd. No use or disclosure is to be made without prior written permission of Trelleborg Offshore UK Ltd. Copyright 2010 Trelleborg Offshore UK Ltd. All rights reserved.

3. Trelleborg recommends that the Molykote D paste (applied between the titanium strap and clamp body in-house during the Internal Clamp assembly procedure) is re-applied if the date of installation of the clamp exceeds a period of 6 months post delivery.
4. To account for inaccuracies in the strap tension installation process a conservative tolerance factor of 5% will be applied in the clamp calculations (See Ref. 1 & 2).

8.2 Crossbar Clearance Measurement Check

The clearance between the crossbars should be checked at various stages of the installation and noted in Table A3, Appendix A – Internal Clamp Installation. Select a location between the upper and lower fasteners to make the measurements. Figure 1 illustrates the crossbar clearance to be measured. At each installation step shown in Table A3, the same location should be measured.

Crossbar clearance

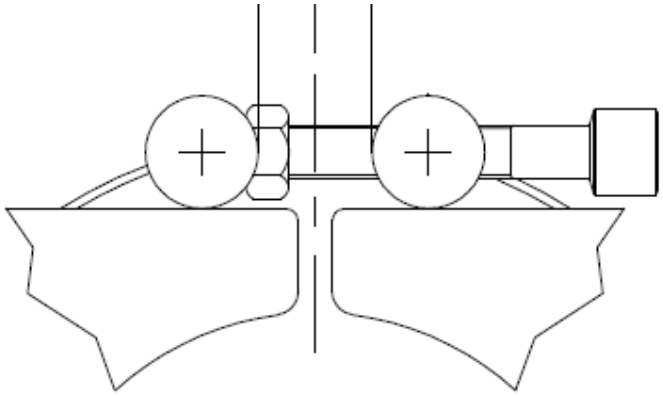

Figure 1

This document contains confidential information. All rights (including copyright, confidential information, trade secrets and design rights) are owned by Trelleborg Offshore UK Ltd. No use or disclosure is to be made without prior written permission of Trelleborg Offshore UK Ltd. Copyright 2010 Trelleborg Offshore UK Ltd. All rights reserved.

9 Internal Clamp Removal

At some point it may be required to remove internal clamps from the risers. If this eventuality does arise then removal should be completed in accordance with the guidelines in Appendix B – Internal Clamp Removal. Note that the diagrams are indicative only.

10 Buoyancy Element Installation

The buoyancy elements are installed in accordance with the guidelines in Appendix C – Buoyancy Element Installation

Prior to installation conduct the following checks.

1. Confirm that the buoyancy element is of the correct type.
2. Visually examine the buoyancy element and confirm that it has not sustained any damage.
3. Take each tensioning assembly in turn and run the locking nuts clear of the threaded cross bar.
4. Examine the tensioning assemblies and ensure that the thread forms are properly lubricated. Re-apply lubricant (Molykote D paste) liberally if required.

NOTES:

1. The securing strap tensioning assemblies require to be installed with the aid of tools that are compatible with the tension assembly material.

2. When using a torque wrench in conjunction with a locknut spanner, it should be noted that the torque lever arm may be effectively increased. The torque reading will require to be adjusted to account for this.

This document contains confidential information. All rights (including copyright, confidential information, trade secrets and design rights) are owned by Trelleborg Offshore UK Ltd. No use or disclosure is to be made without prior written permission of Trelleborg Offshore UK Ltd. Copyright 2010 Trelleborg Offshore UK Ltd. All rights reserved.

11 Buoyancy Element Removal

At some point it may be required to remove the buoyancy element from the riser. If this eventuality does arise then removal should be completed in accordance with the following guidelines. Note, the removal process is the reverse of the installation process.

1. Disengage the tensioning assembly locking nuts by rotating clear of the cross bar.
2. Loosen the securing strap by withdrawing the tensioning screw.
3. Disengage one end of the securing strap from the tensioning assembly and remove from the buoyancy element.
4. Repeat for all securing straps present.
5. Remove the first buoyancy element half from the riser.
6. Remove the second buoyancy element half from the riser.

NOTES:

1. Before re-installing the buoyancy element complete the pre-assembly checks presented in Section 10.

This document contains confidential information. All rights (including copyright, confidential information, trade secrets and design rights) are owned by Trelleborg Offshore UK Ltd. No use or disclosure is to be made without prior written permission of Trelleborg Offshore UK Ltd. Copyright 2010 Trelleborg Offshore UK Ltd. All rights reserved.

Appendix A – Internal Clamp Installation

This document contains confidential information. All rights (including copyright, confidential information, trade secrets and design rights) are owned by Trelleborg Offshore UK Ltd. No use or disclosure is to be made without prior written permission of Trelleborg Offshore UK Ltd. Copyright 2010 Trelleborg Offshore UK Ltd. All rights reserved.

Tensioning Tool Settings – Table A1

Riser	Clamp Strap Operating Tension	Installation Tool Applied Tension	Tensioning Tool Pressure Regulator Valve Setting
Ø245.1mm	137.1 kN	150.3 kN	451 Bar / 6539 PSI

Lock Nut Settings – Table A2

Riser	Lock Nut Torque
Ø245.1mm	240 Nm

1. The "installation tension using tensioning tool" is greater than the "tension required in clamp strap" because the tool only directly tensions the strap and not the fasteners. Once the tensioning tool is removed the fasteners will be loaded and stretch. The additional tension is therefore taken up in the elongation of the fasteners.

2. The pressure regulator valve setting on the tensioning tool is the hydraulic pressure which corresponds directly to the tension applied by the hydraulic tool.

3. Pressure regulator valve settings should be set within + 2 bar.

4. Tension tool pressure has been calculated using a series of Trelleborg conducted in house trials to establish the relationship between hydraulic pressure and strap tension.

5. Lock nut torque is based on the difference in strap tension between installation and maximum operating conditions. The applied torque will induce as a minimum the equivalent of half this tension into each fastener.

6. The installation tension can be referenced in the internal clamp design report (Ref. 1).

TRELLEBORG ENGINEERED SYSTEMS

Clamp Installation Tool Settings

Crossbar Clearance

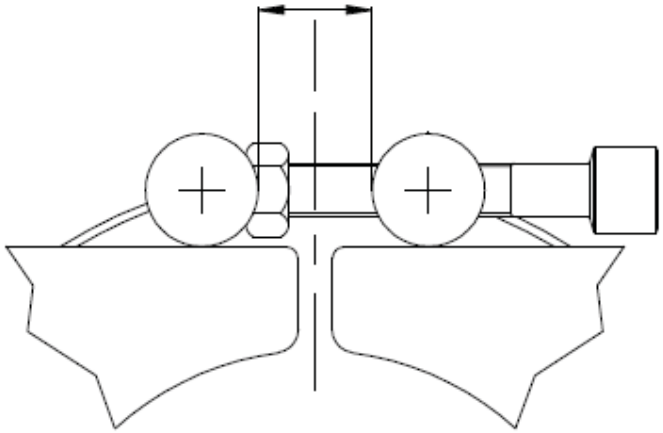

Table A3

Crossbar Clearance Measurement	Clearance (mm)
STEP 13	
STEP 15	
STEP 18	

NOTE:

It is recommended that the crossbar clearance checks are conducted for each clamp to ensure that the strap tension is maintained once the hydraulic pressure is released.

Refer to Section 8.2 Crossbar Clearance Measurement Check.

TRELLEBORG ENGINEERED SYSTEMS

Clamp Installation

Crossbar Clearance Measurements

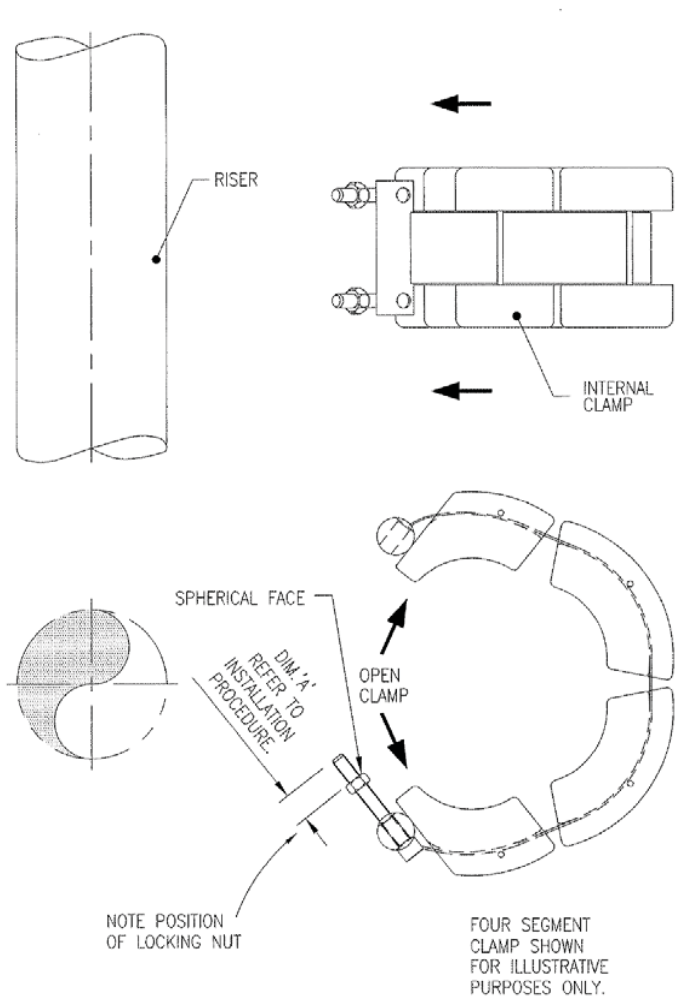

1. Prepare hydraulic tensioning tool in accordance with the Operating Manual (refer to 1005-PR-018 (Ref. 3)), using the ancillaries listed in Table 4-1. Position the correct calibration bar into the **moving** jaws, and advance to position the calibration bar in the fixed jaw.

   Set the locknut latch mechanism to locate around the calibration bars. Advance the moving jaw to load the compression bar and set the regulator valve pressure to the value listed in Table A1. This value should be checked on the digital pressure gauge located on the hydraulic tool. Ensure that all safety guards are in position.
2. Identify the position on the riser at which the clamp will be installed. Inspect the riser surface and ensure that it is clean and in particular free from oil or grease.
3. Open the clamp body and fit around the riser.
4. Locate the clamp at the correct position axially.
5. Insert 2 No. tensioning nuts into the hexagonal recess in the moving jaws with the spherical seats visible. A ball detent will hold them in place.

TRELLEBORG ENGINEERED SYSTEMS

Clamp Installation

1 of 7

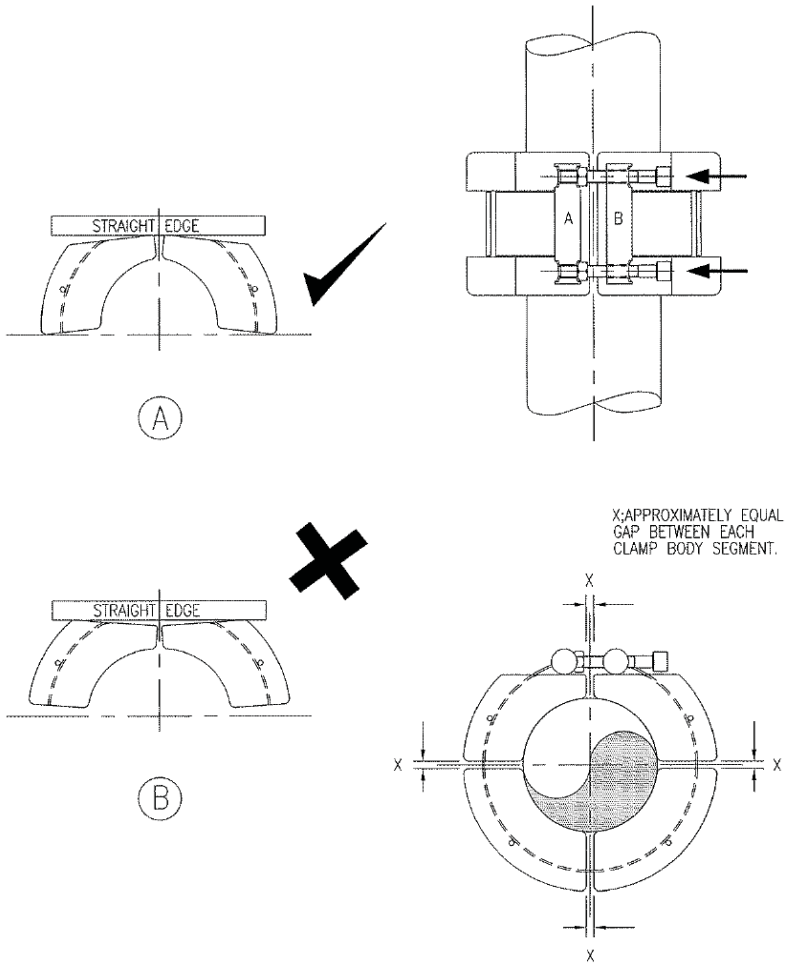

6. Position the clamp body segments such that the flat faces of the segments adjacent to the crossbars are approximately parallel. Ensure the condition shown in Figure (B) does not occur. Ensure that the remaining gaps between the other segments are approximately equal in all cases.

TRELLEBORG
ENGINEERED SYSTEMS

Clamp Installation

2 of 7

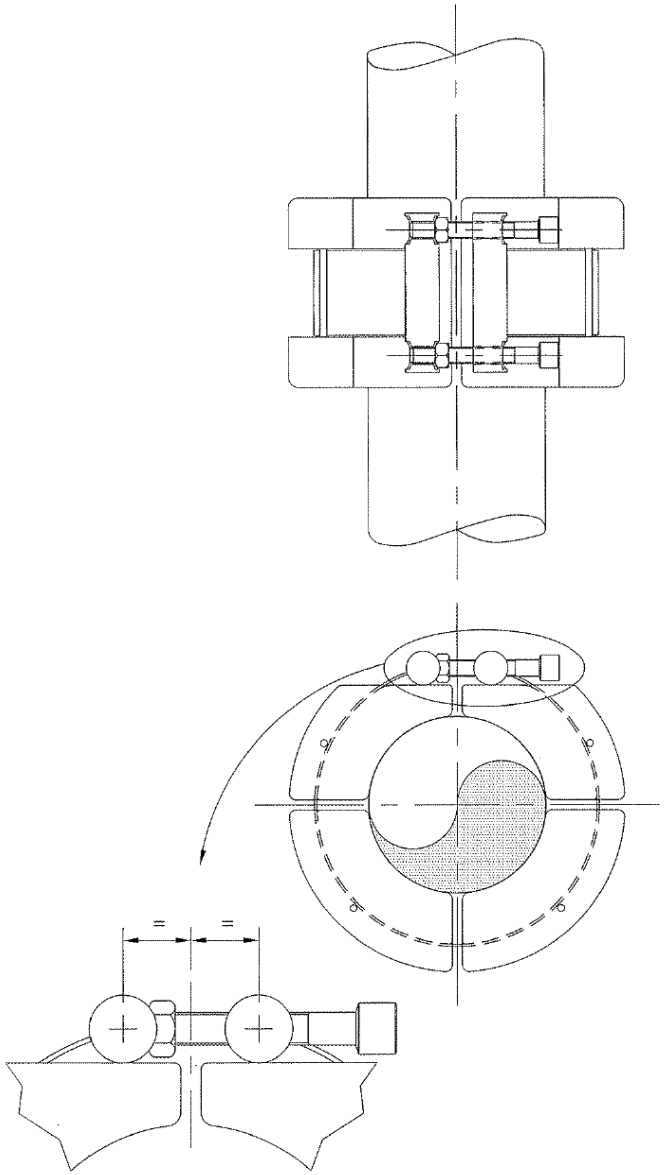

7. Check that the crossbars are located an equal distance either side of the gap between adjacent clamp body segments

TRELLEBORG
ENGINEERED SYSTEMS

Clamp Installation

3 of 7

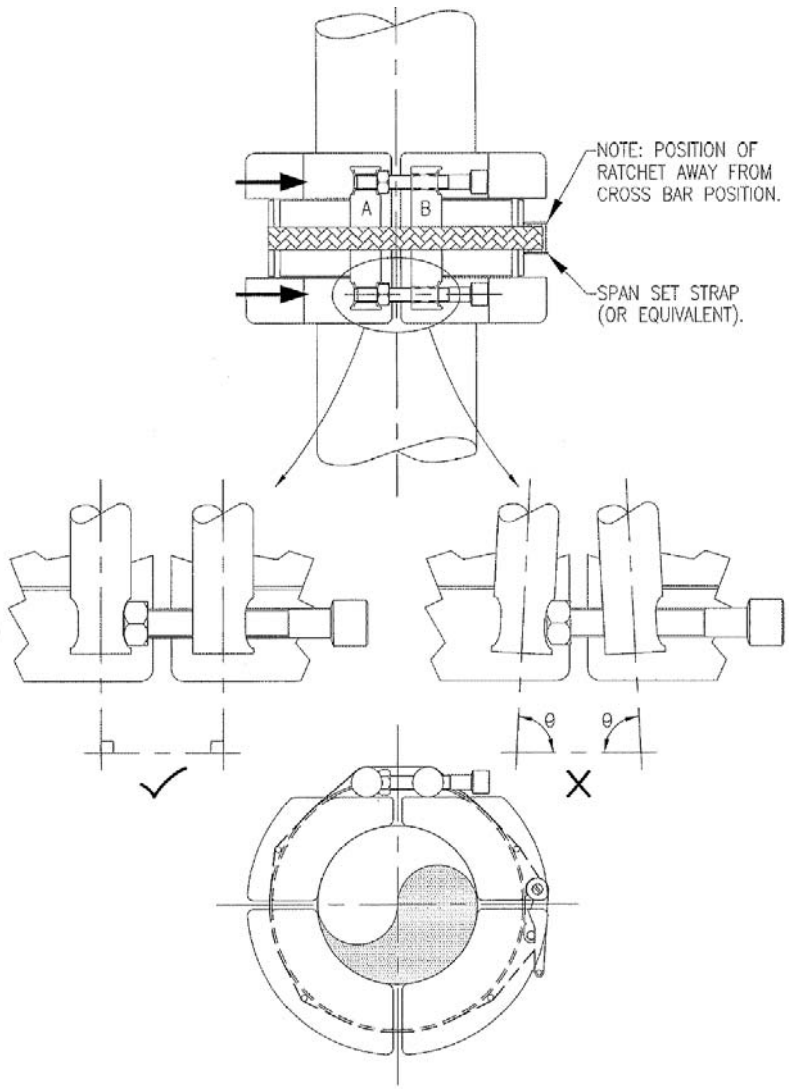

8. Visually examine the securing strap geometry. In particular confirm that cross bars lie approximately parallel to each other. Hold the clamp in position using a cargo strap or equivalent.

TRELLEBORG
ENGINEERED SYSTEMS

Clamp Installation

4 of 7

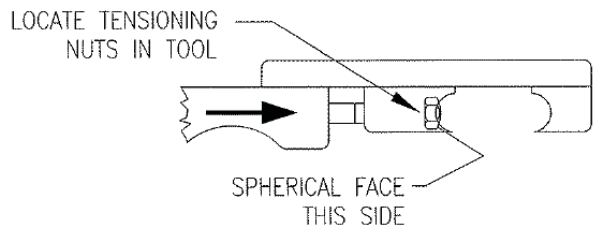

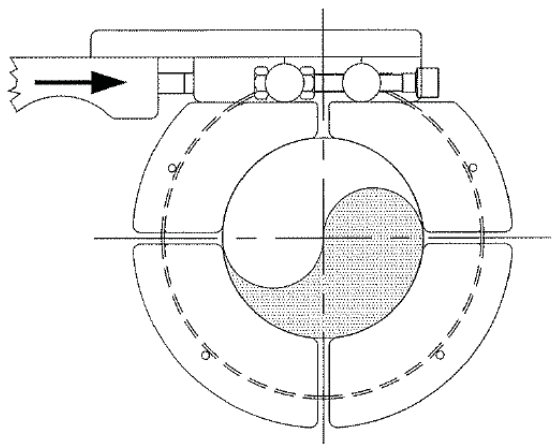

CLAMP FASTENER

9. Check that the pressure gauge on the hydraulic tensioning tool is switched on, and that the power pack is on.

10. Orientate the flats of the Locknuts to receive the latch mechanism. At this point, ensure that the fastener threads do not protrude beyond the outer seat of the crossbar. The locknuts position should be adjusted to allow for this.

11. Locate the tensioning tools over the crossbars. Bring the tool's jaws together using the tool's hand operated valve in the "Advance" position. Check the jaw seats make contact at all points and that the locking nuts are located within the latch mechanisms. Correctly locating the locknut in the latch mechanism prevents the locknut from rotating relative to the tensioning tool.

12. Once the moving jaw is in contact with the crossbar and taken up the slack in the strap, return the hydraulic tool to neutral. Engage the fasteners with the tensioning nuts (note: this process will cause the locknut to be pulled away from the crossbar although still held by the latch mechanism). Apply a torque of 50 Nm to seat the tensioning nuts

13. Measure the crossbar clearance with callipers and a rule and record in table A3.

14. Apply tension to the clamp securing strap with the tensioning tool. Keep the tool's hand operated valve in the "Advance" position. The tensioning tool settings are shown in Appendix A, Table A1

15. Measure the crossbar clearance in the same location as step 13 with callipers and a rule and record in table A3.

TRELLEBORG
ENGINEERED SYSTEMS

Clamp Installation

5 of 7

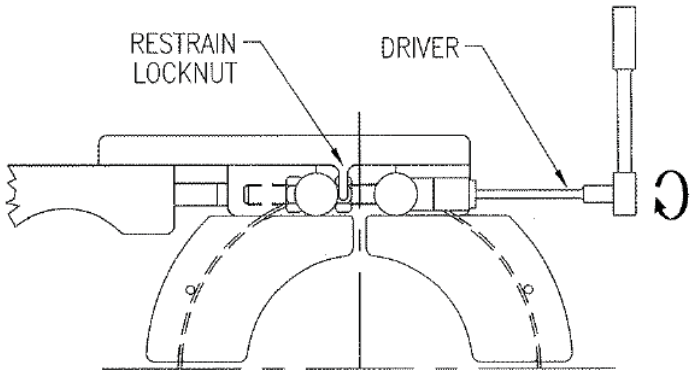

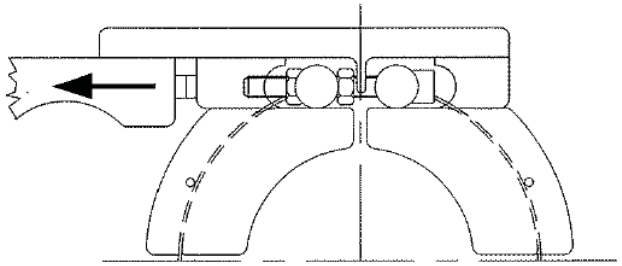

16. Using manual torque wrenches, engage the fasteners until they are seated. During this step the amount of fastener rotations should be counted. The amount of rotations should approximate to the difference between the crossbar gaps measured in steps 15 and 13 divided by the screw pitch (Table 5-1) If the actual rotations are grossly different to the calculated rotations or the rotations differ between upper and lower fasteners then the installation should be repeated
17. Apply a torque of 150 N-m to fully seat the fasteners.
18. Unload the tensioning tool by moving the tool's hand operated valve to the "Retract" position and disengage from the clamp. Measure the crossbar clearance with callipers and a rule and record in table A3. Visually inspect the clamp fasteners to ensure satisfactory installation. Remove spanset or equivalent.
19. The crossbar clearance measured in step 18 should be less than or equal to the crossbar clearance measured in step 15. If not the procedure should be repeated.

TRELLEBORG
ENGINEERED SYSTEMS

Clamp Installation

6 of 7

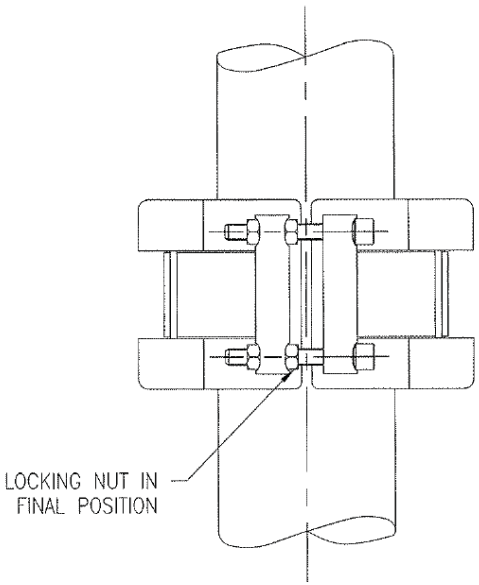

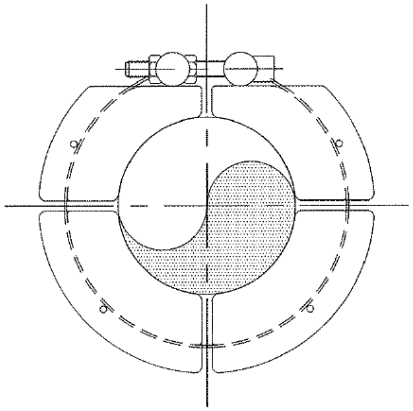

20. Run the locking nuts down the screws until they seat on the cross bar landing.

21. Tighten each of the locking nuts to the torques shown in Table A2. Please note that using a lock nut spanner may increase the lever arm of the torque wrench. The installer should make allowance for this.

22. The installation of the internal clamp is now complete.

NOTES:

1. Should the tensioning process be interrupted or require to be re-applied for any reason, it is imperative that the clamp first be totally de-tensioned.

2. If a successful installation is not achievable after several repeat attempts then the above procedure should be repeated with a higher installation seating torque for step 17. Increase the torque in steps of 50Nm up to a maximum of 300Nm for each repeat attempt.

3. There should be clearance between the clamp segments. If any segments are touching the installation should be repeated.

TRELLEBORG
ENGINEERED SYSTEMS

Clamp Installation

7 of 7

Appendix B – Internal Clamp Removal

This document contains confidential information. All rights (including copyright, confidential information, trade secrets and design rights) are owned by Trelleborg Offshore UK Ltd. No use or disclosure is to be made without prior written permission of Trelleborg Offshore UK Ltd. Copyright 2010 Trelleborg Offshore UK Ltd. All rights reserved.

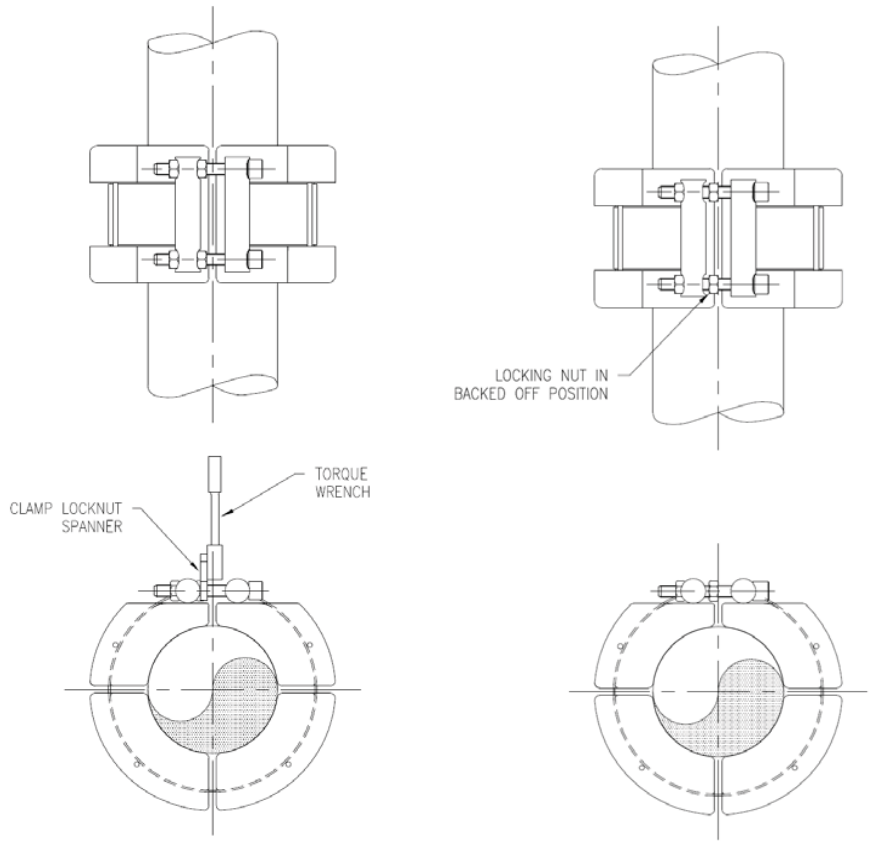

1. Using the correct calibration bar set the tensioning tool pressure to that given in Appendix A, Table A1.
2. Disengage the locking nuts and run them down the screws away from the crossbars by approximately 4 mm. Orientate the lock nuts to receive the tool's latch mechanisms.

TRELLEBORG
ENGINEERED SYSTEMS

Clamp Removal
1 of 4

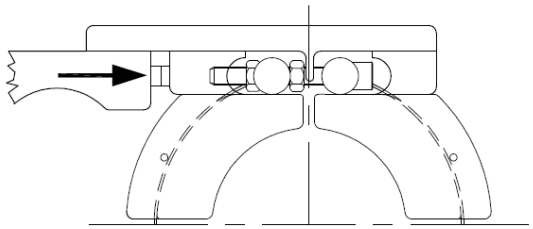

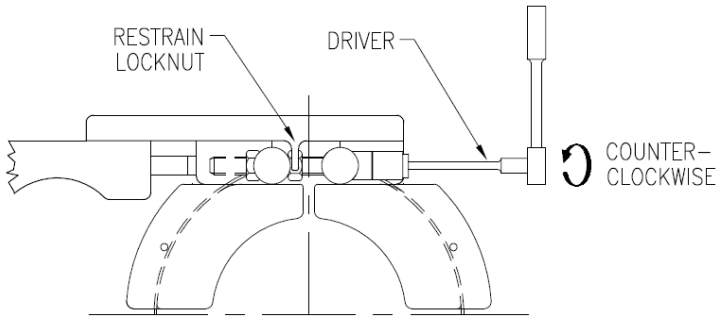

3. Using a straight edge between top and bottom 'Tensioning nuts', orientate the nuts such that the 'flats' of each nut are in the vertical position and parallel to the crossbar. This will ensure smooth engagement of the hexagon jaw body and prevent damage.

4. Offer the tensioning tool up to the crossbars, engaging the crossbar first. Locate the tensioning tool over the fastener heads and crossbars. Check the jaw seats make contact at all points the lock nuts are in the latch mechanism. Ensure pressure gauge is switched on.

5. Apply tension to the clamp securing strap with the tensioning tool. Keep the tool's hand operated valve in the "Advance" position.

6. Undo the fasteners but do not completely remove from the tensioning nuts/crossbar.

7. At this point the clamp should be supported by a secondary means to prevent the clamp from slipping down the riser when the tool is removed

TRELLEBORG
ENGINEERED SYSTEMS

Clamp Removal
2 of 4

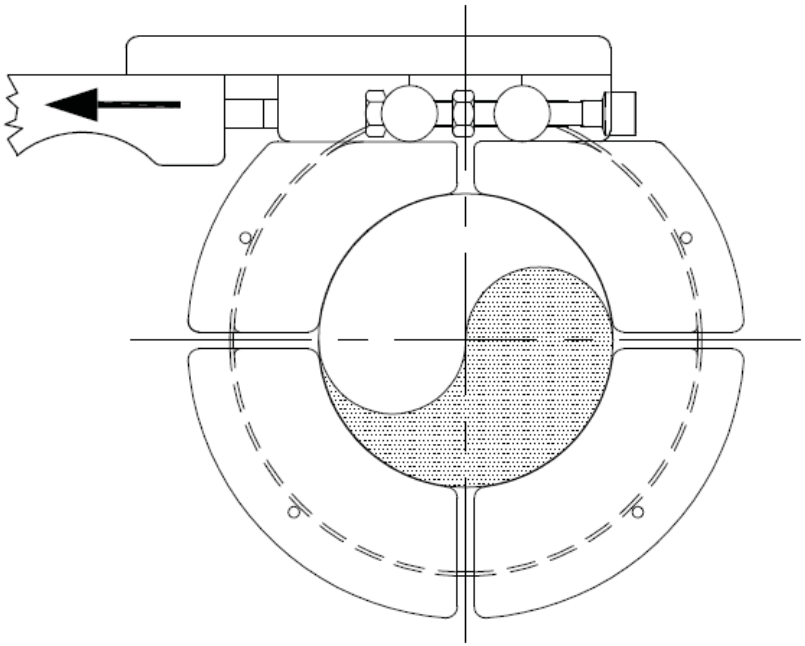

8. Move the tool's hand operated valve to the "Retract" position and unload the tensioning tool and remove from the clamp.

TRELLEBORG
ENGINEERED SYSTEMS

Clamp Removal
3 of 4

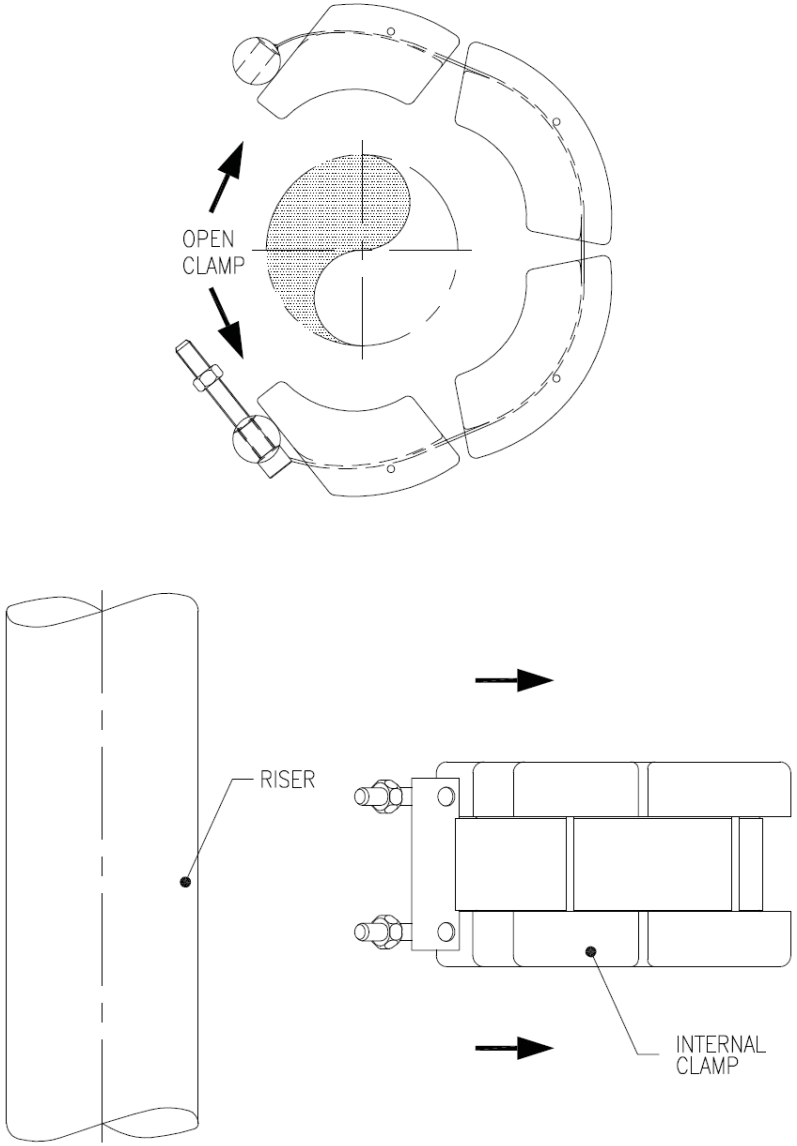

9. Remove fasteners from the crossbar, open the clamp and remove from the riser. Take care not to 'kink' the securing strap. The internal clamp securing strap can be safely reused.

NOTES:

1. Before re-installing the internal clamp complete the pre-assembly checks presented in Section 8.1 Pre-Assembly Checks.

2. Trelleborg requires that the internal clamps are to be uninstalled only with titanium tools.

TRELLEBORG
ENGINEERED SYSTEMS

Clamp Removal
4 of 4

Appendix C – Buoyancy Element Installation

This document contains confidential information. All rights (including copyright, confidential information, trade secrets and design rights) are owned by Trelleborg Offshore UK Ltd. No use or disclosure is to be made without prior written permission of Trelleborg Offshore UK Ltd. Copyright 2010 Trelleborg Offshore UK Ltd. All rights reserved.

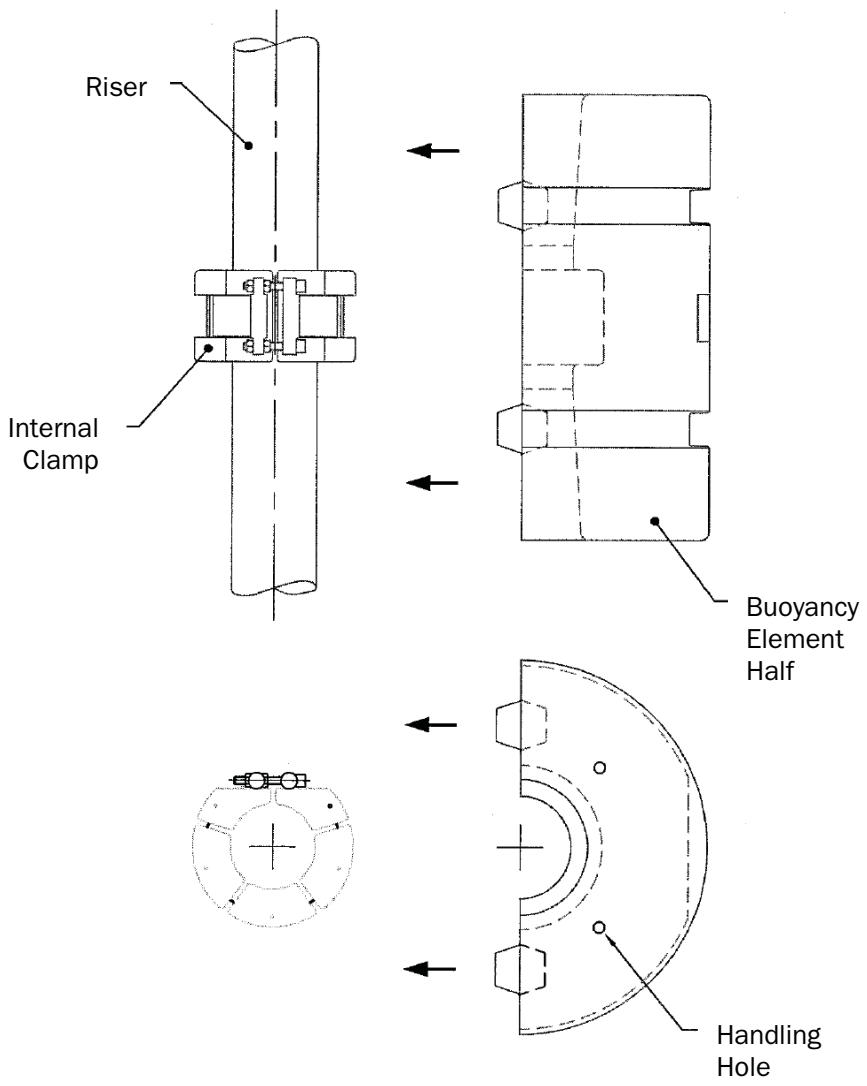

1. Fit the first buoyancy element half around the riser/internal clamp

TRELLEBORG
ENGINEERED SYSTEMS

Buoyancy Element Installation
1 of 8

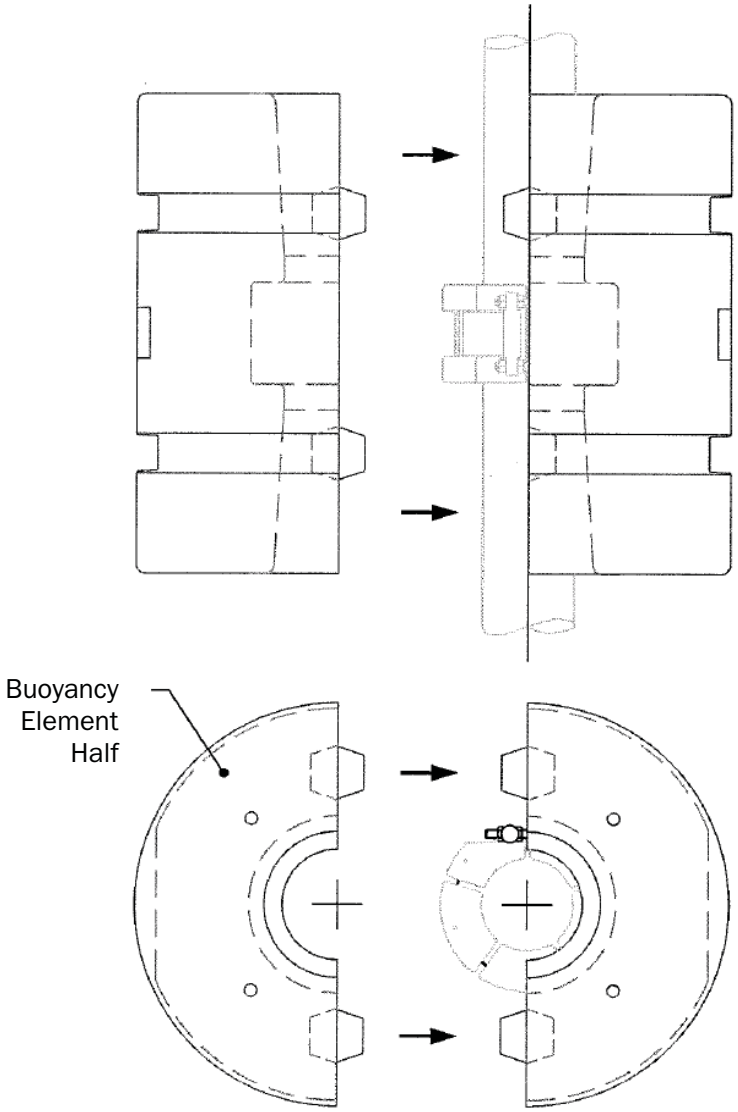

2. Fit the second buoyancy element half around the riser/internal clamp. A cargo strap or similar may be used as a temporary aid to pull the element halves together prior to fitting the securing straps.

TRELLEBORG
ENGINEERED SYSTEMS

Buoyancy Element Installation
2 of 8

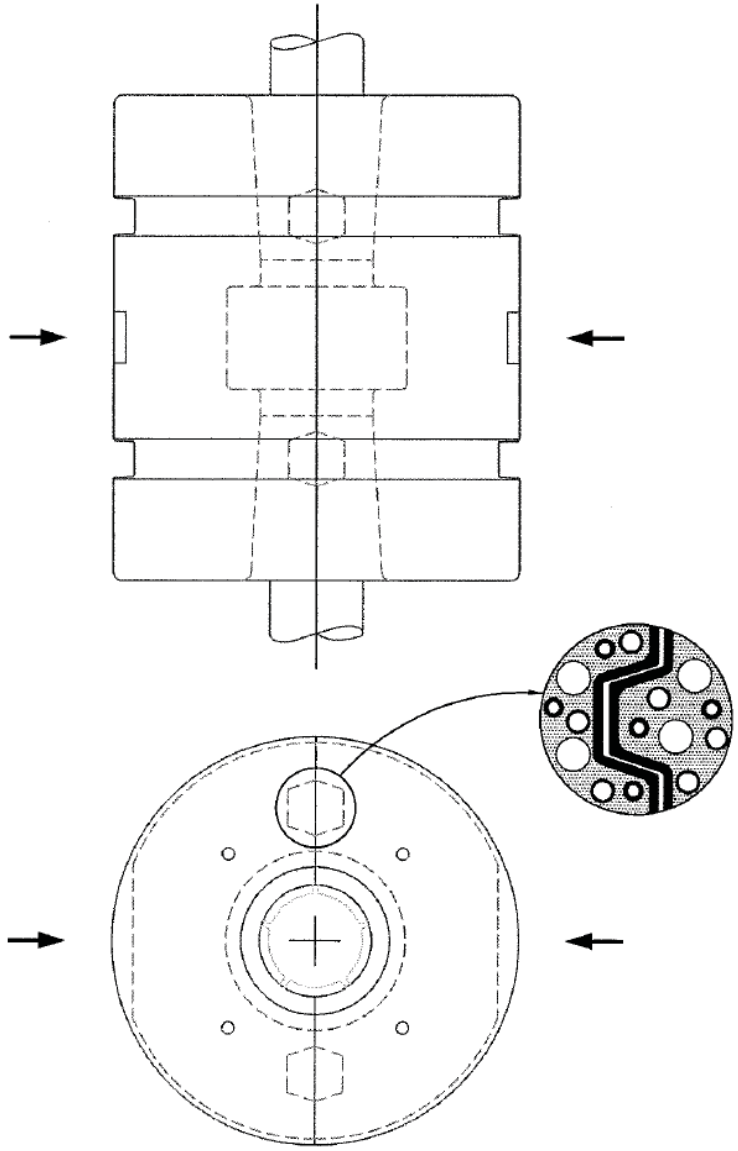

3. Ensure that the spigot and sockets on opposing element halves are properly engaged.

TRELLEBORG
ENGINEERED SYSTEMS

Buoyancy Element Installation
3 of 8

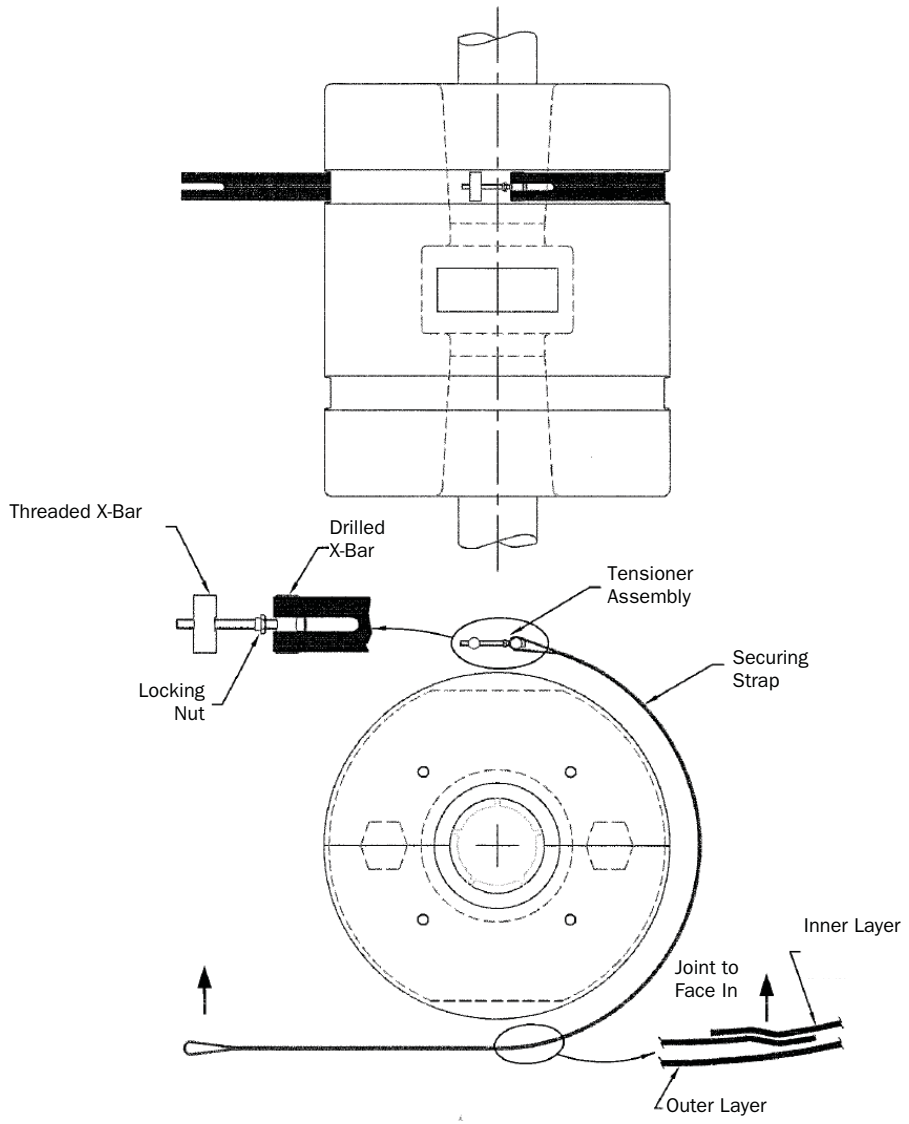

4. Take a tensioning assembly and fit the drilled cross bar into the free end of a securing strap.

5. Fit the first securing strap around the buoyancy element and ensure the following:-
   - The strap lies properly within the element external circumferential groove.
   - The strap joint faces inwards and lies directly against the element external shell.
   - The tensioning assembly fits centrally into the recess in the external surface of the buoyancy element.

TRELLEBORG ENGINEERED SYSTEMS

Buoyancy Element Installation
4 of 8

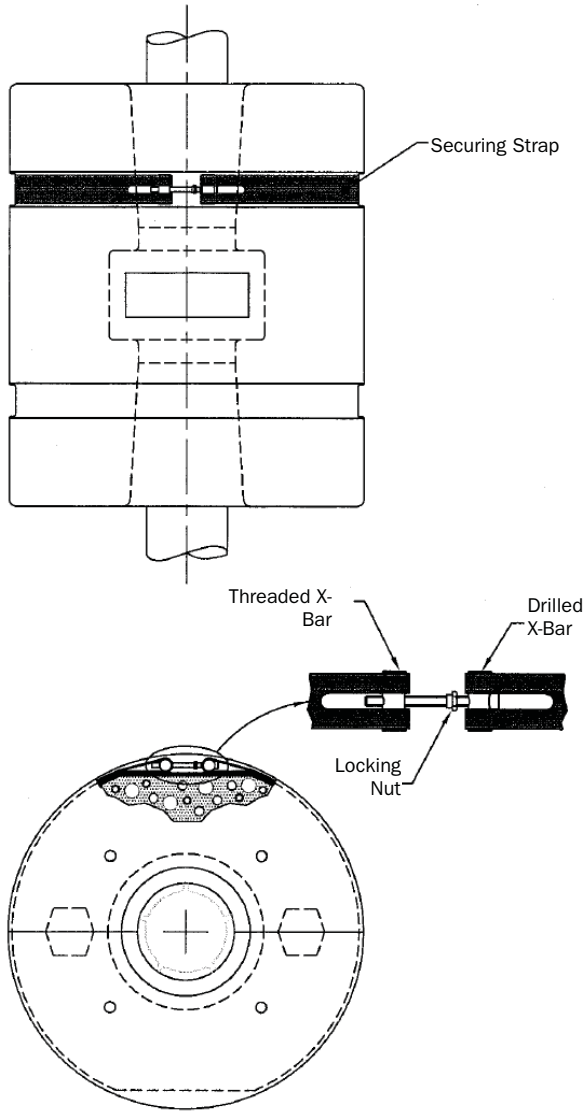

6. Engage the free end of the securing strap with the tensioning assembly cross bar. Do not tension the strap at this stage.

TRELLEBORG
ENGINEERED SYSTEMS

Buoyancy Element Installation
5 of 8

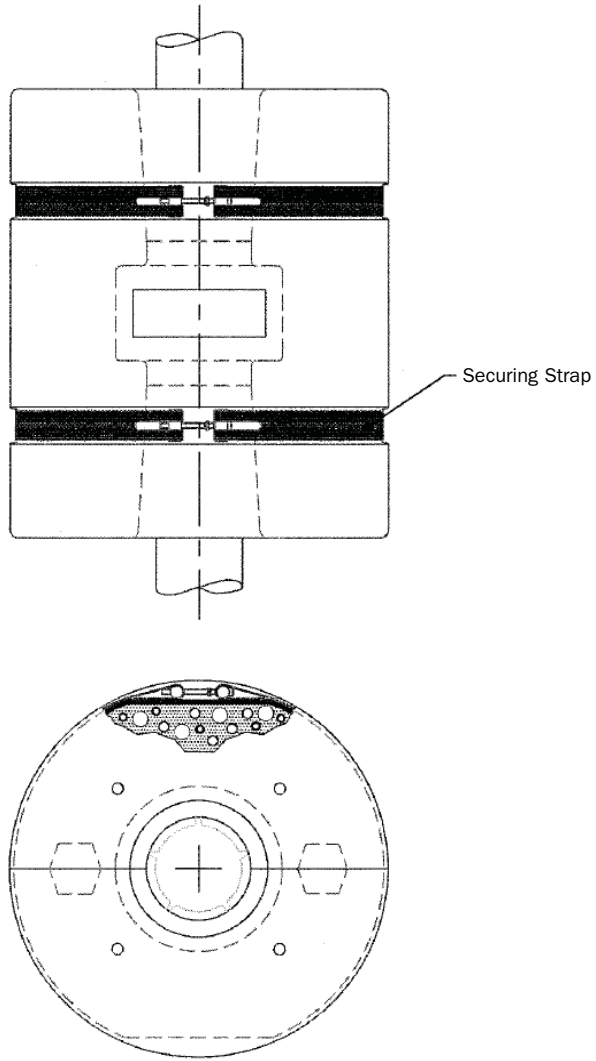

7. Repeat Steps 4 to 6 for all remaining securing straps.

TRELLEBORG
ENGINEERED SYSTEMS

Buoyancy Element Installation
6 of 8

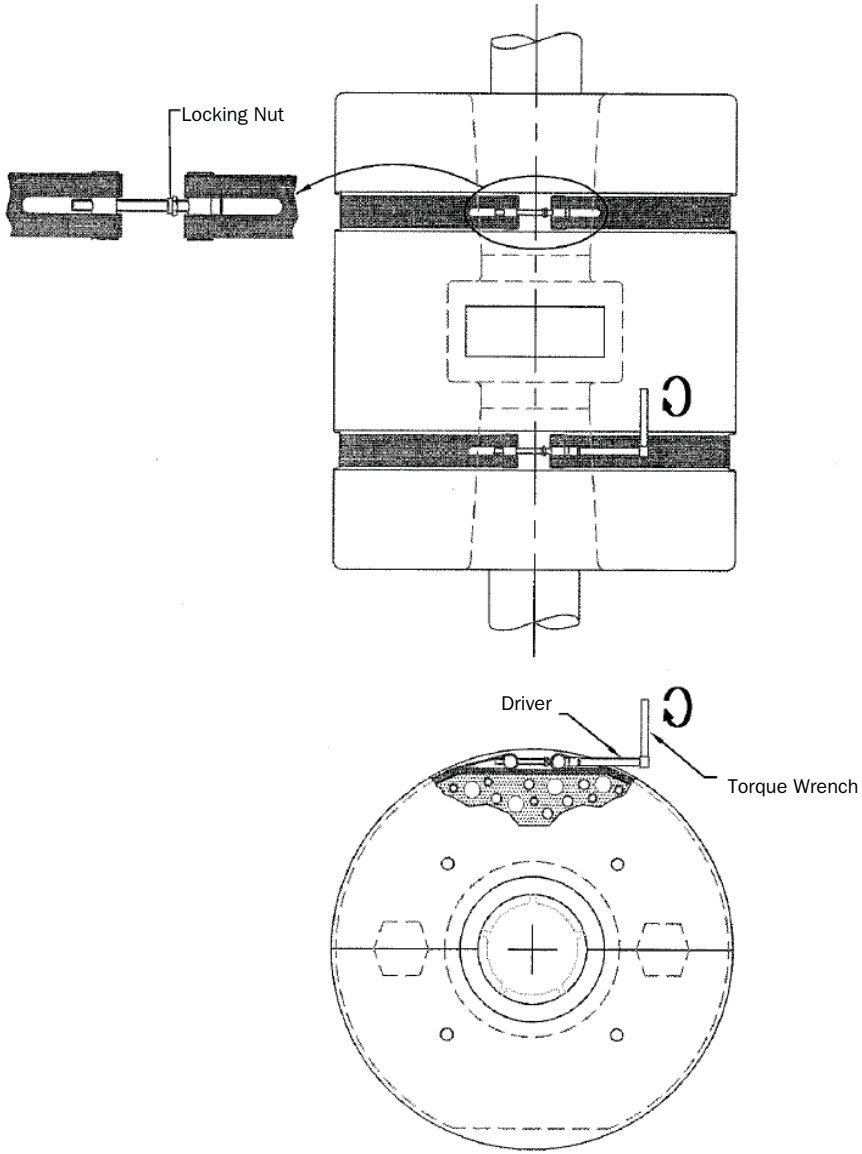

8. Apply a torque to the tensioner assembly. Gradually increase the torque in each assembly in turn rather than completing each activity in isolation.

   Tensioner Torque Requirement = 45 Nm.

TRELLEBORG
ENGINEERED SYSTEMS

Buoyancy Element Installation
7 of 8

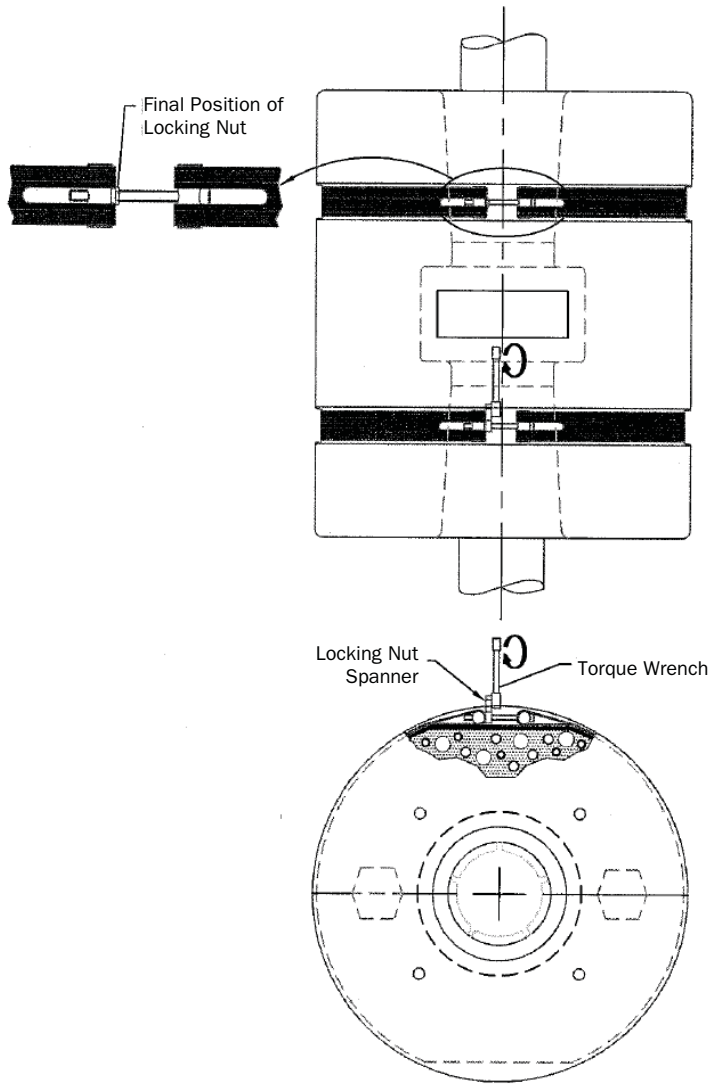

9. Run down the locking nuts on each tensioning assembly until they land on the recess provided. Ensure that the locking nut does not foul on the securing strap. Tighten the locking.

   Locknut Torque Requirement = 45Nm.

10. The installation of the buoyancy element and hence the entire buoyancy module has now been completed.

TRELLEBORG
ENGINEERED SYSTEMS

Buoyancy Element Installation
8 of 8

ITEM	QTY	DESCRIPTION	MATERIAL	DRAWING No.
1	2	ELEMENT EXTERNAL SHELL	POLYETHYLENE (LINEAR MEDIUM DENSITY)	C433540
2	2	ELEMENT CORE	SYNTACTIC FOAM	N/A
3	1	INTERNAL CLAMP G.A.	NOTED	C433538
4	2	ELEMENT SECURING STRAP	INTERNAL FIBRES TO BE ARAMID. LOW MODULUS. EXTERNAL SHEATH TO BE ETHYLENE VINYL ACETATE (E.V.A.) OR ETHYLENE ACRYLIC ACID (E.A.A.).	C433541
5	2	M12 TENSIONING ASSEMBLY	ASTM A276 S32760	C428000

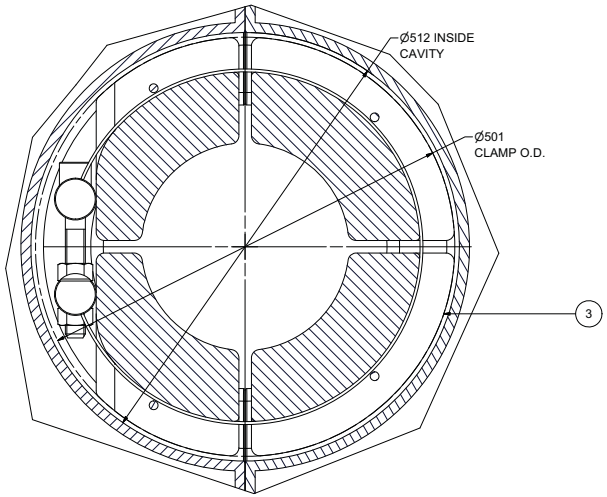

SECTION VIEW THRU ELEMENT CAVITY
SCALE (1 : 3)

NOTES:-

1. THE BUOYANCY MODULE IS SECURED TO A Ø245.1 RISER.
2. THE RISER HAS AN EXTERNAL DIAMETER OF 245.1 mm (NOMINAL) AND A MINIMUM BEND RADIUS OF 3.32 m.
3. FINAL HANDLING HOLE DIAMETER WILL BE REDUCED TO 30mm (DUE TO ADDITION OF A LINER TUBE PLACED THROUGH THE SHELL DURING FILLING PROCESS).
4. THE BUOYANCY MODULE DESIGN DEPTH IS 1524 METRES.
5. THE FINAL MODULE BUOYANCY IS 528 kg.
6. THE WEIGHT IN AIR OF THE BUOYANCY MODULE IS :

CLAMP - 30.1 kg
ELEMENT - 622.7 kg

TOTAL - 652.9 kg

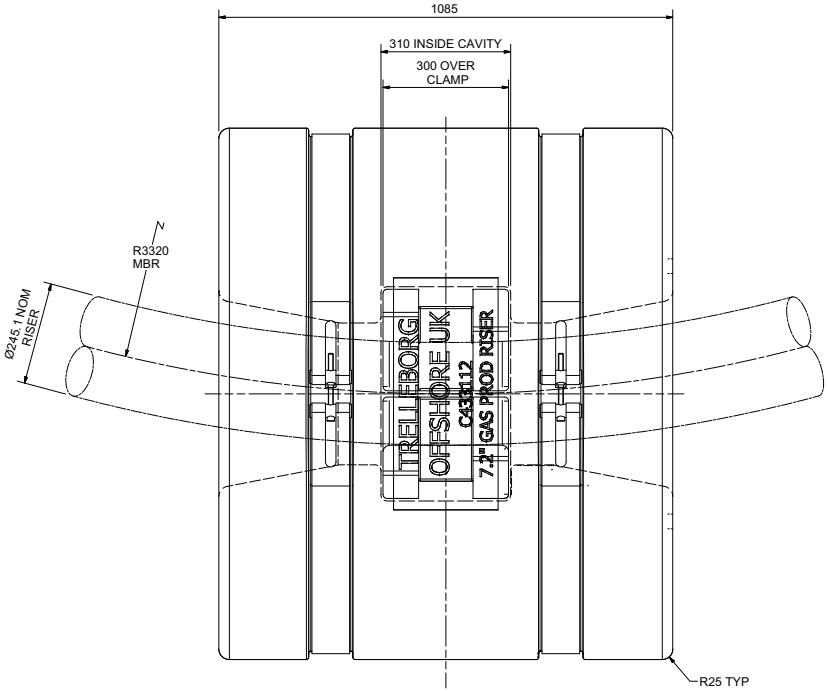

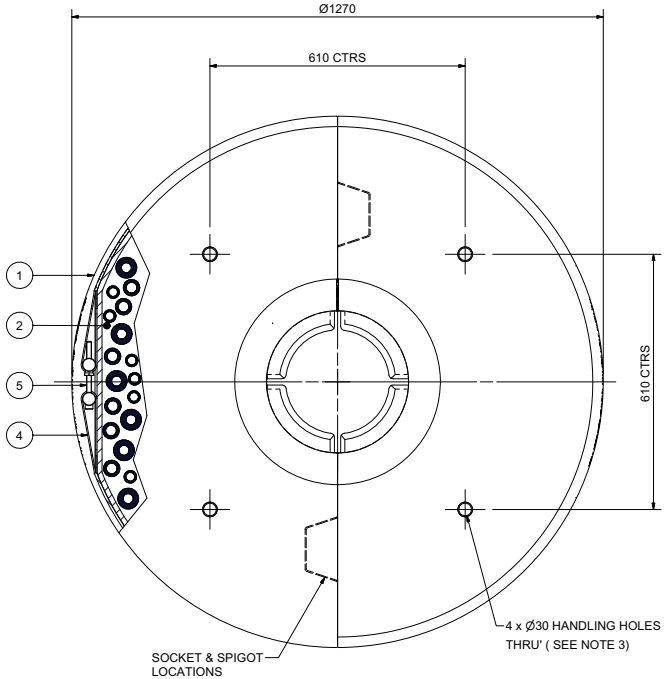

REV	DATE	DESCRIPTION	DRAWN	CHK'D	APPR'D
1	26/05/2010	FIRST ISSUE	MJ		

TRELLEBORG OFFSHORE UK LTD
STANLEY WAY, STANLEY, SKELMERSDALE, LANCASHIRE, WN8 8EA, ENGLAND.
U.K. TELEPHONE: 01695 712000
U.K. FACSIMILE: 01695 712111

CLIENT: BP
PROJECT: MACONDA CDP
TITLE: GENERAL ARRANGEMENT
Ø245.1 RISER DISTRIBUTED BUOYANCY MODULE

SCALE: 1 : 6	UNITS: mm	SHEET SIZE : A1	PROJECTION

IF IN DOUBT ASK	MODELLED BY	DRAWN BY	DRAWING STATUS
	MJ	MJ	RELEASED

PROJECT No.	DRAWING No.	REV
WO9674	C433542 SHEET 1 OF 1	01

THIS DOCUMENT CONTAINS CONFIDENTIAL INFORMATION. ALL RIGHTS (INCLUDING COPYRIGHT, CONFIDENTIAL INFORMATION , TRADE SECRETS AND DESIGN RIGHTS) ARE OWNED BY TRELLEBORG OFFSHORE UK LTD. NO USE OR DISCLOSURE IS TO BE MADE WITHOUT PRIOR WRITTEN PERMISSION OF TRELLEBORG OFFSHORE UK LTD. COPYRIGHT 2010 TRELLEBORG OFFSHORE UK LIMITED. ALL RIGHTS RESERVED.

ITEM	QTY	DESCRIPTION	MATERIAL	DRAWING No.
1	1	INTERNAL CLAMP BODY	TB760PS	C433535
2	1	INTERNAL CLAMP STRAP	TITANIUM ALLOY GRADE 5	C433536
3	2	TENSIONING SCREW	TITANIUM ALLOY GRADE 5	C433537
4	4	LOCKING NUT	TITANIUM ALLOY GRADE 5	C433537
5	4	RETAINING BAR Ø10 LENGTH = 290mm	NYLON 66	N/A
6	1	SILICONE SEALANT TO BS5889:1989	SILICON BASE	N/A

NOTES:

1. RETAINING BARS TO BE SECURED IN PLACE USING ADHESIVE. ADHESIVE TO BE SILICON BASED SEALANT IN ACCORDANCE WITH BS 5889.
2. BEFORE FINAL ASSEMBLY CLAMP BODY EXTERNAL RECESS AND CROSSBAR BEARING SURFACES ARE TO BE COATED WITH A NON-METALLIC LUBRICANT.
3. TENSIONING SCREWS ARE TO BE LUBRICATED DURING ASSEMBLY OF THE CLAMPS. LUBRICANT IS TO BE APPLIED TO BOTH FASTENER THREADS AND UNDER CAP SCREW HEADS.
4. THE WEIGHT IN AIR OF THE INTERNAL CLAMP IS 30.1 kg.
5. THE CLAMP BUOYANCY IN SEAWATER IS 3.9 kg.

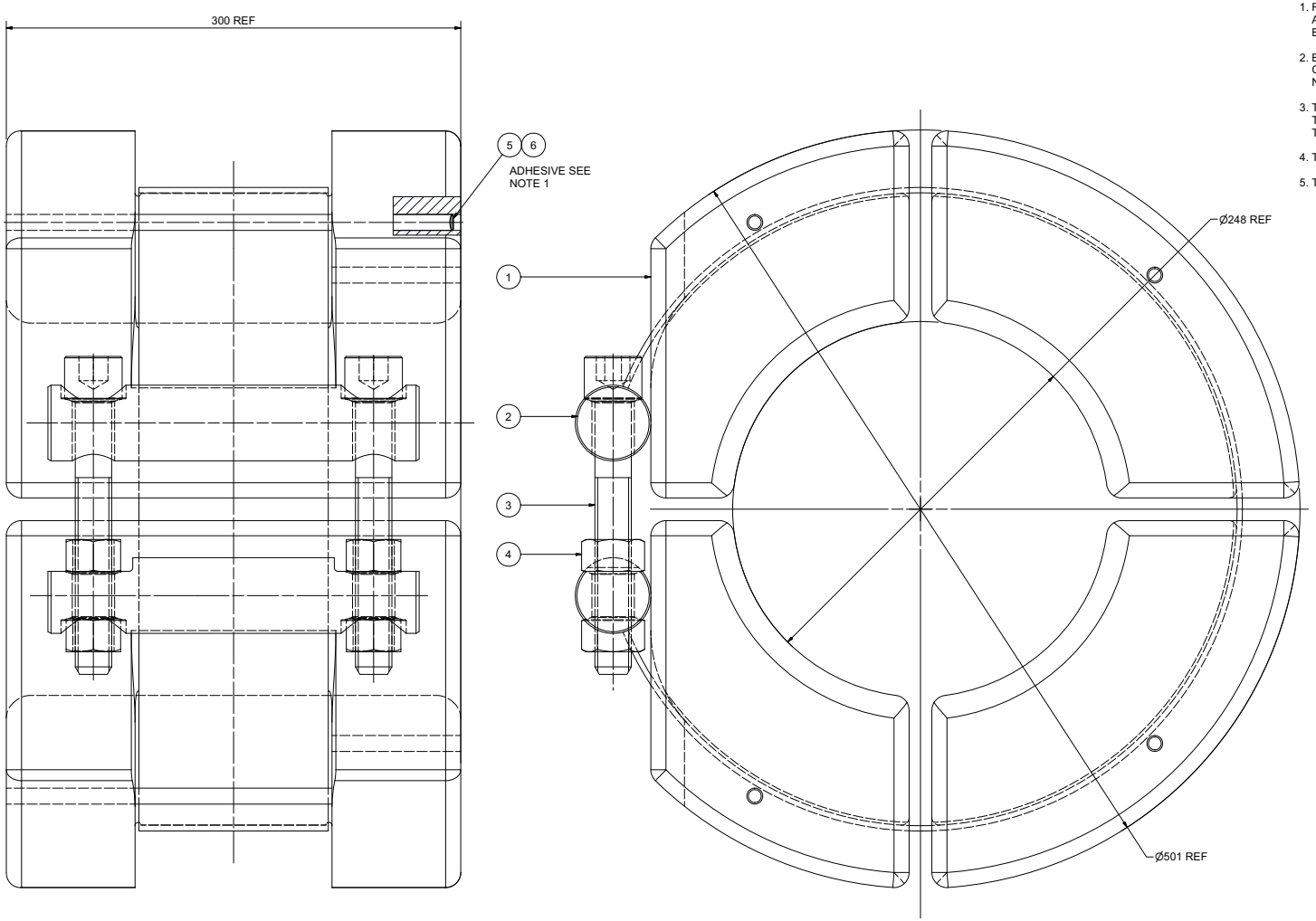

REFERENCE DRAWINGS:
Ø245.1 RISER D.B.M. GENERAL ARRANGEMENT - C433542

REV	DATE	DESCRIPTION	DRAWN	CHK'D	APPR'D
1	26/05/2010	FIRST ISSUE	MJ		

TRELLEBORG OFFSHORE UK LTD
STANLEY WAY, STANLEY, SKELMERSDALE,
LANCASHIRE, WN8 8EA, ENGLAND.
U.K. TELEPHONE: 01695 712000
U.K. FACSIMILE: 01695 712111

CLIENT: BP

PROJECT: MACONDA CDP

TITLE: INTERNAL CLAMP G.A.
Ø245.1 RISER DISTRIBUTED BUOYANCY MODULE

SCALE: 1 : 1.5	UNITS: mm	SHEET SIZE : A1	PROJECTION

IF IN DOUBT ASK	MODELLED BY	DRAWN BY	DRAWING STATUS
	MJ	MJ	RELEASED

PROJECT No.	DRAWING No.	REV
WO9674	C433538 SHEET 1 OF 1	01

THIS DOCUMENT CONTAINS CONFIDENTIAL INFORMATION. ALL RIGHTS (INCLUDING COPYRIGHT, CONFIDENTIAL INFORMATION , TRADE SECRETS AND DESIGN RIGHTS) ARE OWNED BY TRELLEBORG OFFSHORE UK LTD. NO USE OR DISCLOSURE IS TO BE MADE WITHOUT PRIOR WRITTEN PERMISSION OF TRELLEBORG OFFSHORE UK LTD. COPYRIGHT 2010 TRELLEBORG OFFSHORE UK LIMITED. ALL RIGHTS RESERVED.

DRAWING No.		REV.
C433114	SHEET 1 OF 1	02

THIS DOCUMENT CONTAINS CONFIDENTIAL INFORMATION. ALL RIGHTS (INCLUDING COPYRIGHT, CONFIDENTIAL INFORMATION , TRADE SECRETS AND DESIGN RIGHTS) ARE OWNED BY TRELLEBORG OFFSHORE UK LTD. NO USE OR DISCLOSURE IS TO BE MADE WITHOUT PRIOR WRITTEN PERMISSION OF TRELLEBORG OFFSHORE UK LTD. COPYRIGHT 2010 TRELLEBORG OFFSHORE UK LIMITED. ALL RIGHTS RESERVED.

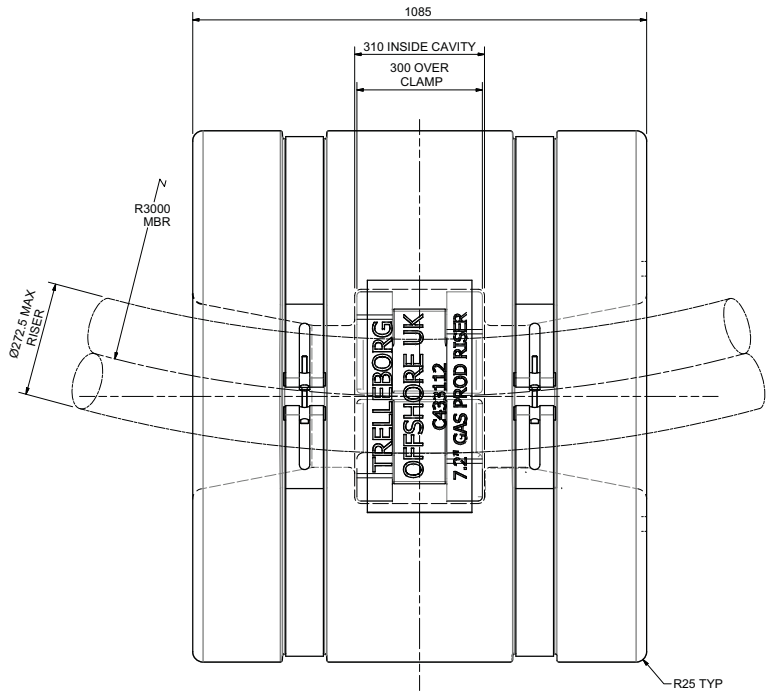

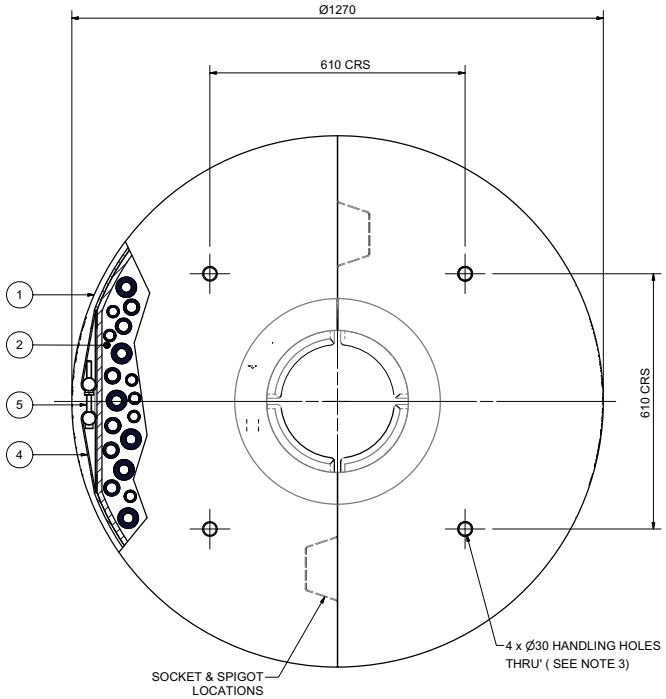

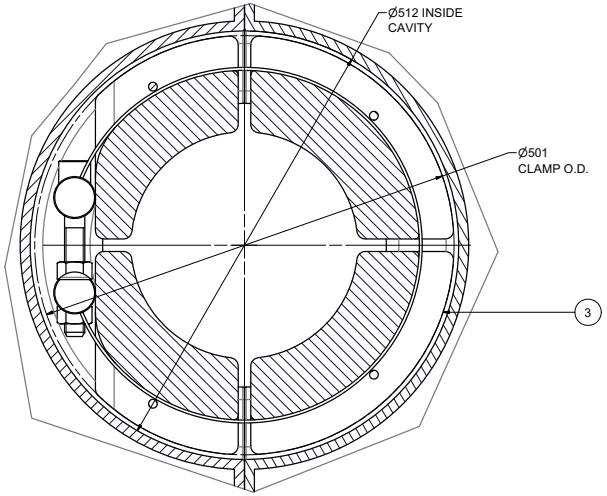

SECTION VIEW THRU ELEMENT CAVITY
SCALE (1 : 3)

ITEM	QTY	DESCRIPTION	MATERIAL
1	2	ELEMENT EXTERNAL SHELL	SEE CRG. No. C433112
2	2	ELEMENT CORE	SYNTACTIC FOAM
3	1	INTERNAL CLAMP ASSEMBLY	SEE DRG.NO. C433111
4	2	ELEMENT SECURING STRAP	SEE DRG.NO. C433113
5	2	M12 TENSIONING ASSEMBLY	SEE DRG.NO. C428000

NOTES:-

1. THE BUOYANCY MODULE IS SECURED TO A 7.2" GAS PROD RISER. (2)
2. THE RISER HAS AN EXTERNAL DIAMETER OF 268.1 mm (NOMINAL) AND A MINIMUM BEND RADIUS OF 3 m.
3. FINAL HANDLING HOLE DIAMETER WILL BE REDUCED TO 30mm (DUE TO ADDITION OF A LINER TUBE PLACED THROUGH THE SHELL DURING FILLING PROCESS).
4. THE BUOYANCY MODULE DESIGN DEPTH IS 500 METRES.
5. THE FINAL MODULE BUOYANCY IS 591.3 kg.
6. THE WEIGHT IN AIR OF THE BUOYANCY MODULE IS :

CLAMP - 28.2 kg
ELEMENT - 551.2 kg

TOTAL - 579.4 kg

REV	DATE	DESCRIPTION	DRAWN	CHK'D	APPR'D
2	26/03/2010	TITLE AND NOTE 1	LH	AF	AK
1	10/03/2010	FIRST ISSUE	DRW	AF	AK

TRELLEBORG
TRELLEBORG OFFSHORE UK LTD
STANLEY WAY, STANLEY, SKELMERSDALE,
LANCASHIRE, WN8 8EA, ENGLAND.
U.K. TELEPHONE: 01695 712000
U.K. FACSIMILE: 01695 712111

CLIENT: TECHNIP UK LTD.

PROJECT: FOINAVEN R6R

TITLE: 7.2" GP RISER DISTRIBUTED BUOYANCY MODULE GENERAL ARRANGEMENT

SCALE: 1:6	UNITS: mm	SHEET SIZE: A1	PROJECTION:

PROJECT No.	DRAWING No.	REV.
WO9387	C433114 SHEET 1 OF 1	02

IF IN DOUBT ASK!

Uraduct Installation Manual

Trelleborg CRP Ltd

TRELLEBORG

TYPICAL URADUCT INSTALLATION

HALF-SHELL ASSEMBLY PROCEDURE

Introduction

One of the many advantages of Uraduct is that it can be simultaneously installed onto a Cable, Riser, Flowline or Umbilical during a shipboard lay operation. Unlike alternative protection systems it does not require additional support craft, dual lay and protection operation or complex field scheduling.

Apart from the banding tools which are supplied by CRP, no special equipment is required.

A minimum of two staff are normally required to install the Uraduct. One to fit the half shells and place the bands on the Uraduct, and one to operate the banding tools. It is quick and easy to install, and where speed of lay is important up to 350m/hr can be fitted for cable installations with a team of 6 – 8 people using 3 – 4 pneumatic banding tools.

The Uraduct design can be installed as single pairs but CRP recommend that the half-shells are installed with the patented 50% overlap between the upper and lower mouldings. This technique in conjunction with the dowels and mating holes on the axial split line provide a stronger interlocked and connected system for the whole length of coverage.

The following represents a brief outline of Uraduct Installation:

Procedure

STEP 1: - To start installation take two half-shells of Uraduct mouldings. Ensure the female end of the Uraduct is facing **outboard** and overlap the half-shells by 50% as shown in fig 1. The Uraduct is specifically designed to generate the correct overlap when the dowels and mating holes are aligned and the two half-shells lock together. The external banding grooves will automatically line up.

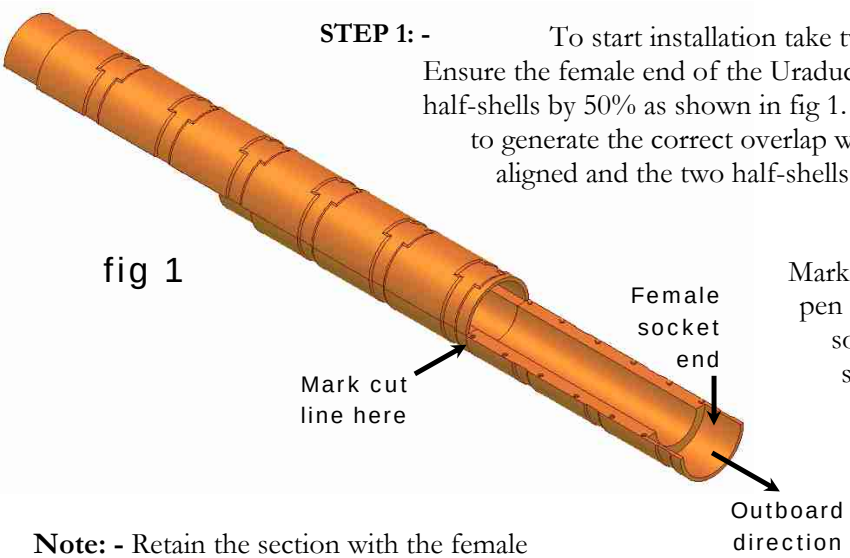

fig 1

Mark the female socket end with a marker pen and cut at the interface of the female socket. The material can be cut with a standard hack saw or power saw – no special tools are required.

Note: - Retain the section with the female socket for use at the end of the Uraduct string. **DO NOT DISCARD ANY PIECES**

TRELLEBORG
ENGINEERED SYSTEMS

STEP 2: -

Take a further piece of Uraduct half shell and remove the male spigot. Save this Uraduct half shell for the end of the Uraduct string.

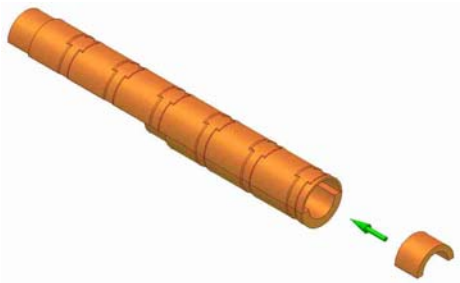

STEP 3:-

If required the male spigot can be glued into place at the female start end. Band the Uraduct together using the banding tools to attach the bands (see banding guide)

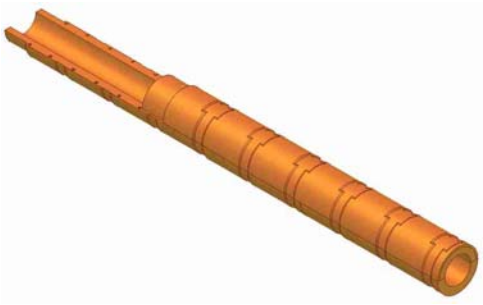

STEP 4:-

Continue to install the full lengths of Uraduct shells so that each length overlaps its opposite half shell by 50%. Band the Uraduct half shells together as each section is added.

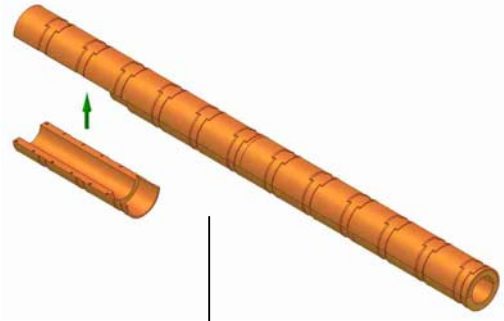

STEP 5:-
When the last full length piece of Uraduct has been fitted, fit the Uraduct half shell with spigot removed (as retained from step 2) and finally fit the piece of half shell (retained from step 1) to complete the Uraduct string.

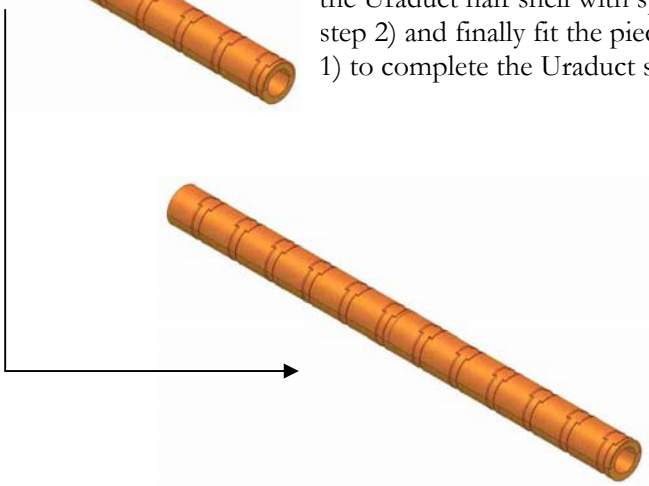

URADUCT®
cable and flowline protection

TRELLEBORG OFFSHORE - PRODUCTION METHOD SHEET

Uraduct Banding

(This PMS is complete at Section No 5)

Choose Applicable Locations TCL
Category SIM

Issue Notes:
<5> Safety Notes added.

APPROVAL	Author	Health and Safety	Authoriser
PMS No 317	Jayne Simm	Ray Cann	Paul Ryding
Issue No 5	06/04/2001	06/04/2001	06/04/2001

1 SAFETY NOTES

<5> 1.1 Hand protection is to be worn whilst handling the banding.

1.2 Eye protection must be worn at all times when handling or using the equipment.

2 INTRODUCTION

This method applies to the preparation, assembly and application of metallic banding to CRP Uraduct using the Signode (or similar) pneumatic tensioning and sealing tool.

The banding is supplied cut to size or in reels.

The Signode tool must be adjusted to apply the correct tension, prior to commencement of banding. This can be done at CRP or on site.

3 EQUIPMENT/MATERIAL REQUIREMENTS

3.1 CRP Uraduct mouldings.

3.2 Signode or similar pneumatic tensioning and sealing tool.

3.3 Banding as per order requirements cut to size or in reels.

3.4 Seals as per order requirements.

3.5 Reel stand (optional).

3.6 Compressed air supply.

3.7 Anti-seize compound, if required.

4 PREPARATION

NOTE: In order to prevent corrosion of internal parts an possible fouling of the air-motor, the compressed air must be CLEAN, DRY AND LUBRICATED.

When installing the compressed air supply, a filter, regulator, lubricator unit should be stationed within 15 feet (4.6m) of the banding tool, and the supply should incorporate a drain cock which should be inspected and drained daily.

Maximum safe operating pressure is 90 psi (6 Bar) minimum air pressure required to operate the sealer is 65 psi (4.5 Bar).

4.1 Place the banding reel into the stand from either side so that the reel sits in the narrow cage and rests on the two bottom rollers.

4.2 Cut the reel retaining bands free and rotate the reel so that the loose end is visible and at the base of the stand. The stand will feed from either side.

4.3 Feed the loose end of banding under the nearest frame side roller and up through the gap between the side roller and the extreme side of the frame. The banding is now ready to dispense.

4.4 Inspect the tensioning tool for damage or defects and check that the correct jaws are fitted for the width of the banding in use.

4.5 Check that the tool air motor valve collar is turned fully anti-clockwise, to off. Ensure that the tool jaws and tensioning wheel are free of obstruction and connect the compressed air supply to the tool.

4.6 Check that the air pressure is sufficient to attain the required banding tension.

4.7 The banding tension will have been preset at CRP and should not require further attention. If however, the setting has been disturbed, the tension may be manually adjusted. The tool may be fitted with one of two designs of tension adjusters. If the tool is fitted with a locknut/stud assembly at the rear of the air-motor, the tension is adjusted by slackening the locknut and turning the stud using a 4mm allen key clockwise to decrease tension, anti-clockwise to increase. If the tool is fitted with a screwdriver slot under the air motor on-off valve, the tension is adjusted by turning the valve fully on to expose the screwdriver slot, then turning the inner screw until the motor slows or speeds up - the tension will decrease or increase with motor speed.

4.8 It is advisable to check the banding tension prior to actual assembly. This is achieved by assembling the band and seal as detailed in Section 5, and operating the tool to tension the band but not seal or cut it. At this point, check the banding tension is correct. The band should be secure, but not so tight as to cause deformation of the Uraduct. Reset the band tension if required.

5 APPLICATION OF BANDING

Refer to CRP Drawings B405517 & B405516 - Uraduct Banding Sequence

5.1 Assemble the Uraduct mouldings around the pipe or cable as illustrated in Drawing B405517 Steps 1 and 2, so that the moulding location dowels fully interlock. The Uraduct opposing sections should be overlapped by half their length for better joint

stability, and end termination mouldings used if supplied to close the overlap distance at either end of the Uraduct string, or manually cut Uraduct to obtain a flush first end.

5.2 Position the reel stand at the first joint with the reel perpendicular to the Uraduct and the loose end nearest to it.

5.3 Slide a seal, smooth side uppermost, over the loose end of the banding as illustrated in Drawing B405517 Step 3.

5.4 Feed the banding over the top and around the Uraduct, keeping the seal in position over the top of the Uraduct and on the side of the operator, as illustrated in Drawing B405517 Step 4.

5.5 Feed the loose end of the banding through the seal <u>underneath</u> the first wrap, so that the banding tail protrudes from the seal by 50-60mm.

5.6 Bend the banding tail back underneath the seal, as illustrated in Drawing B405517 Step 5.

5.7 Hold the seal and pull on the main banding length back towards the reel to take up the slack.

5.8 If required apply anti-seize compound to the underside of the main banding length for 100-150mm from the reel side of the seal, as illustrated in Drawing B405517 Step 6.

Note: Non-metallic based lubricants should be used for this operation if required.

5.9 Ensure the banding is at mid point in the Uraduct groove, or the tool jaws may not engage properly onto the seal.

5.10 Position the tool over the main banding length which returns to the reel and operate the tool in accordance with the manufacturers instructions, to tension, seal and cut the band. This action is indicated in Drawing B405517 Step 7.

5.11 Check the band position and tension.

5.12 Proceed with banding application for the remainder of the Uraduct.

PMS No 317/Iss 5
End of Document

DRAWING No. B405516 | ISSUE 02

THIS DOCUMENT CONTAINS CONFIDENTIAL INFORMATION. ALL RIGHTS (INCLUDING COPYRIGHT, CONFIDENTIAL INFORMATION, TRADE SECRETS AND DESIGN RIGHTS) ARE OWNED BY C.R.P. GROUP LTD. NO USE OR DISCLOSURE IS TO BE MADE WITHOUT PRIOR WRITTEN PERMISSION OF C.R.P. GROUP LTD. COPYRIGHT 2006 C.R.P. GROUP LIMITED. ALL RIGHTS RESERVED

CAUTION– ALWAYS WEAR HAND & EYE PROTECTION

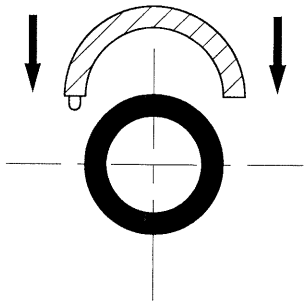

STEP 1

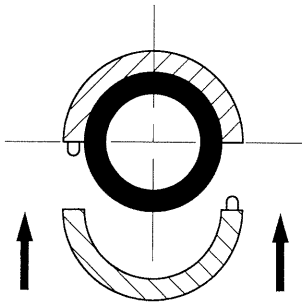

STEP 2

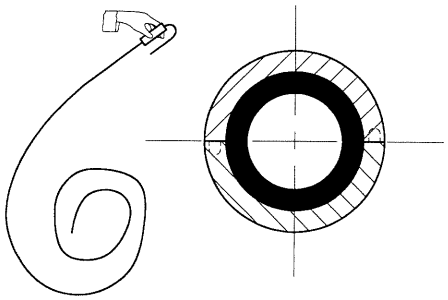

STEP 3

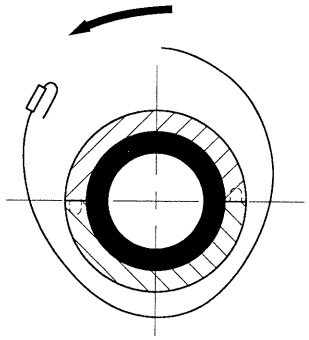

STEP 4

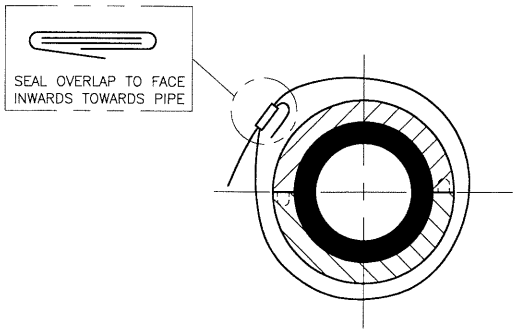

STEP 5

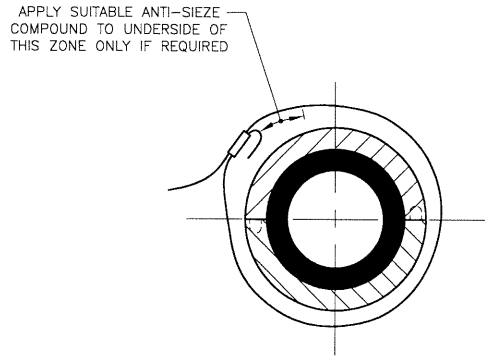

STEP 6

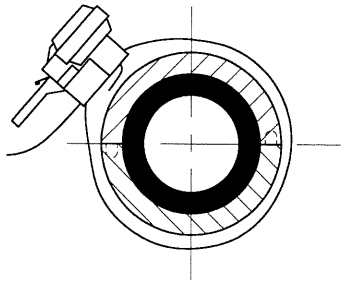

STEP 7

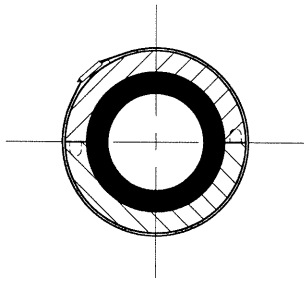

STEP 8

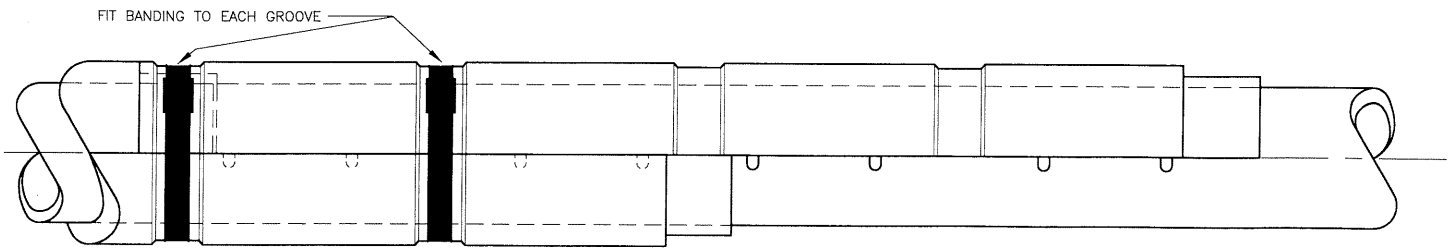

DIRECTION OF BANDING →

STEP 9

NOTE – DRAWING IS NOT TO SCALE

No.	DATE	REVISION	DRAWN	CHK'D	APPR'D
02	27/11/96	STEP 6 MODIFIED			
01	19/07/95	FIRST ISSUE	PJH	TY	RM

CRP GROUP LIMITED
STANLEY WAY, STANLEY, SKELMERSDALE, LANCASHIRE, WN8 8EA, ENGLAND.
U.K. TELEPHONE : 01695 712000
U.K. FACSIMILE : 01695 712111

CLIENT CRP GROUP LTD

PROJECT URADUCT PROTECTION SYSTEM

TITLE URADUCT INSTALLATION SEQUENCE FOR PRECUT BANDING

SCALE	DRAWN BY	SHEET SIZE	PROJECTION
:NTS		A3	

PROJECT No.	DRAWING No.	ISSUE
CR1004	B405516	2

CAD GENERATED DRAWING, DO NOT ALTER MANUALLY (836)

DRAWING No.	ISSUE
B 405517	01

THIS DOCUMENT CONTAINS CONFIDENTIAL INFORMATION. ALL RIGHTS (INCLUDING COPYRIGHT, CONFIDENTIAL INFORMATION, TRADE SECRETS AND DESIGN RIGHTS) ARE OWNED BY C.R.P. GROUP LTD. NO USE OR DISCLOSURE IS TO BE MADE WITHOUT PRIOR WRITTEN PERMISSION OF C.R.P. GROUP LTD. COPYRIGHT 1995 C.R.P. GROUP LIMITED. ALL RIGHTS RESERVED

CAUTION– ALWAYS WEAR HAND & EYE PROTECTION

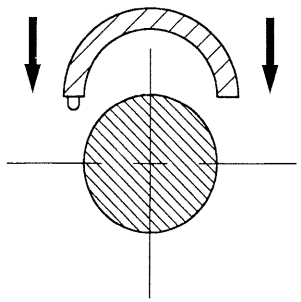

STEP 1

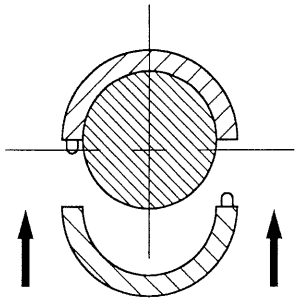

STEP 2

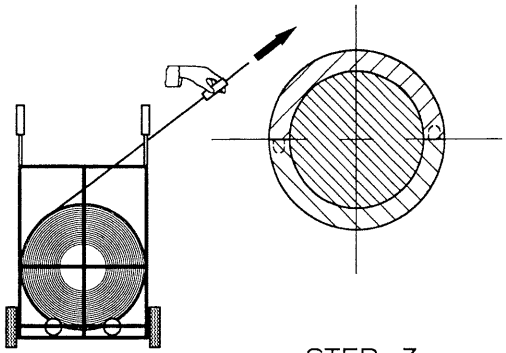

STEP 3

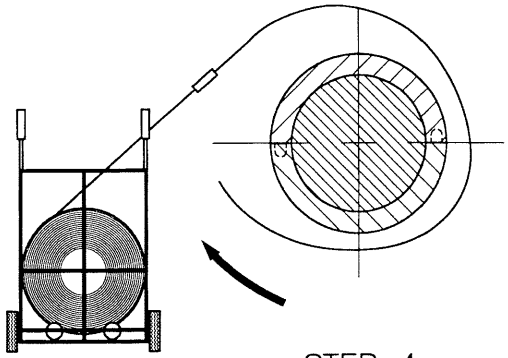

STEP 4

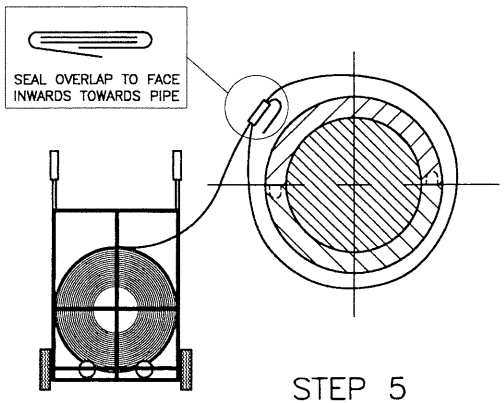

STEP 5

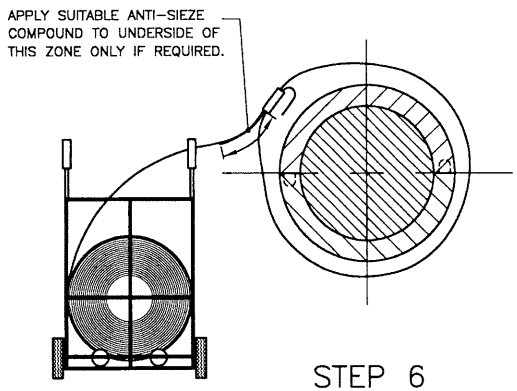

STEP 6

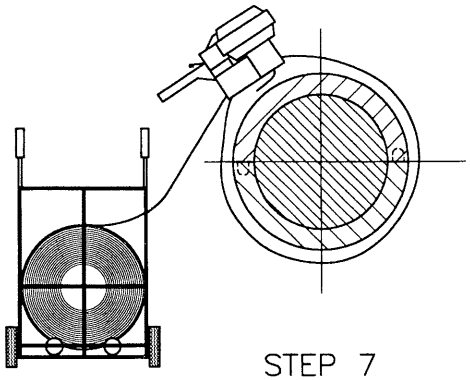

STEP 7

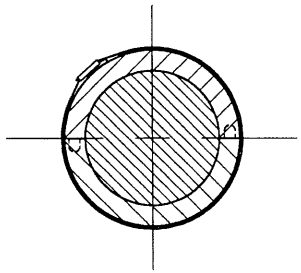

STEP 8

NOTE – DRAWING IS NOT TO SCALE

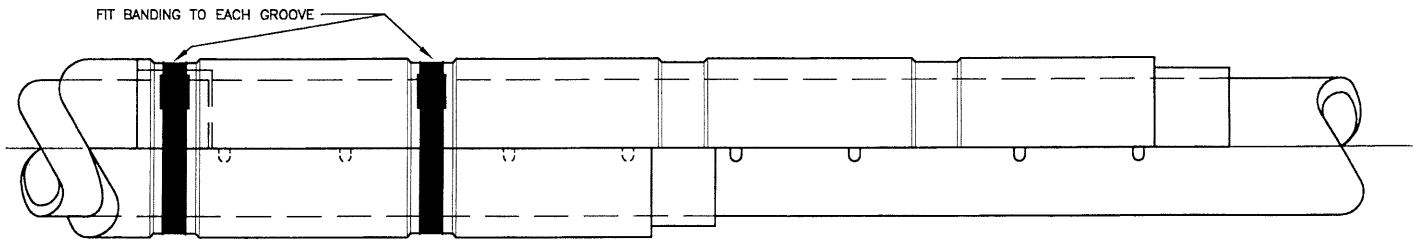

DIRECTION OF BANDING →

STEP 9

No.	DATE	REVISION	DRAWN	CHK'D	APPR'D
01	19/07/95	FIRST ISSUE			

C.R.P. GROUP LTD
STANLEY WAY, STANLEY, SKELMERSDALE, LANCASHIRE, WN8 8EA, ENGLAND.
U.K. TELEPHONE : 01695 724343
U.K. FACSIMILE : 01695 721444

CLIENT CRP GROUP LTD

PROJECT URADUCT PROTECTION SYSTEM

TITLE

URADUCT INSTALLATION SEQUENCE FOR CONTINUOUS BANDING

SCALE	DRAWN BY	SHEET SIZE	PROJECTION
:NTS	PJH	A3	

PROJECT No.	DRAWING No.	ISSUE
CR1004	B 405517	01

FILE LOCATION : F:\DRAWINGS\405DWG\517–13M.DWG

CAD GENERATED DRAWING, DO NOT ALTER MANUALLY (B36)

WHITEFIELD PLASTICS CORPORATION

∅8” ID 78” LOR VBR SYSTEM ASSEMBLY PROCEDURE

WHITEFIELD PLASTICS #A1014901

TECHNIP ASSY #

PO:

P0	01 Jun 2010	Released for client review	BGS		
Rev.	Date	Description	By	Endorsed	Approved

Designing and Molding Custom Urethane Products since 1961
Whitefield Plastics

2300 W.W. Thorne Dr.
Houston, TX 77073
USA
www.whitefieldplastics.com

CONTENTS

1. Required Tools: 4
2. Preparation Work 4
3. VBR String Make-up Procedure 4
4. Appendix 8

Read carefully! Failure to follow procedure may damage components.

Figure 1 – Termination Connection

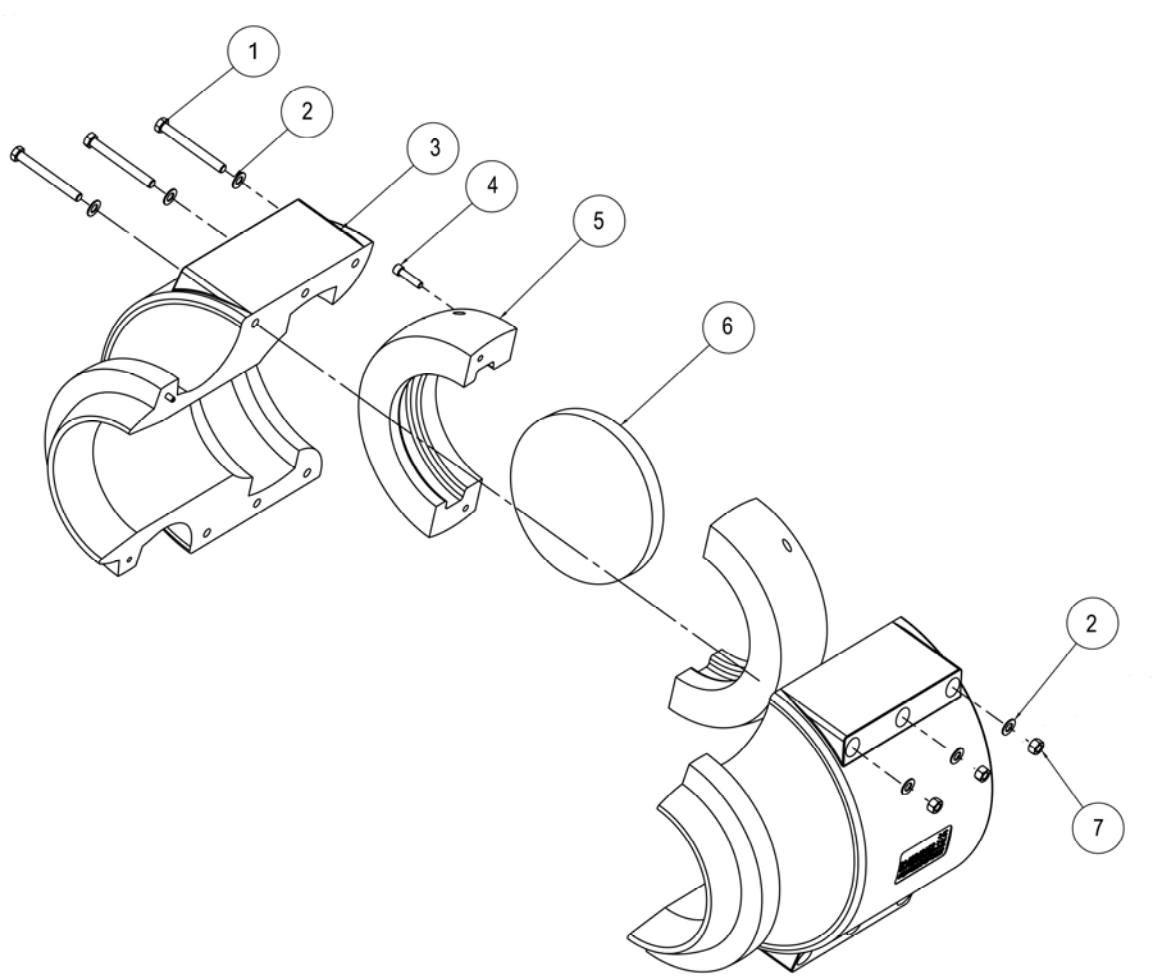

Item NO.	Part Number	Description
1	STOCK ITEM	½-13 UNC x 4½” Hex Head Bolt
2	STOCK ITEM	Ø½ Flat Washer, TY B, Narrow
3	83107809VB	78” LOR - VBR
4	STOCK ITEM	3/8-16 UNC x 1.5” LG, Socket Head Cap Screws, ASTM A574
5	W10052901	Technip (BP) Macondo 4” Flexible Interface adaptor
6		(Technip) 4” Vertebrae connection ring
7	STOCK ITEM	½-13 UNC Nylon Insert Nut, 316 SS
Note: VBR Assembly will be provided with 316 SS hardware.		

Read carefully! Failure to follow procedure may damage components and will void all warranties.

1. Required Tools:

1. ¾” Socket [19 mm also works]
2. Ratchet Wrench or Air Tool
3. Torque Wrench
4. Loctite Marine Grade (P/N: 34026) lubricant or similar
5. Wire brush (matched to bolt material)
6. 5/16” Allen wrench [8 mm also works]
7. Socket set extension bar, 5”+ [127mm+] recommended

2. Preparation Work

1. Check material
2. Set Torque Wrench to the appropriate torque value listed in Table 1.

3. VBR String Make-up Procedure

This procedure will take you though the installation of a complete VBR string. Each VBR string consists of three types of components; the VBR Interface Adaptor (PN: W10052901 rev A), the VBR (PN: 83107809VB rev A), and the VBR End Cap (PN: 83107809EC rev A). All pieces are manufactured in half pieces and must be installed around the Flexible to provide protection against kinking. Each half is bolted to the opposite half of the segment though a pattern of counter bored bolt holes. Refer to Table 1 for the appropriate hardware and installation torque to be used for each VBR. Below follows the generic steps to assembling a VBR string onto a Flexible.

Table 1 – Schedule of Hardware

∅8" 78” LOR VBR		
Item	Mat.	Details
Bolt (qty)	As-supplied[2]	1/2"-13 UNC 4 1/2" LG, Hex Head bolt (6)
Bolt Torque lubricated[1]	316 SS (UNS S31600)	45 ft-lb [61 N-m]
	SAE Grade 2	45 ft-lb [61 N-m]
	SAE Grade 5	50 ft-lb [67.8 N-m]
	SAE Grade 7	50 ft-lb [67.8 N-m]
	Super Duplex	50 ft-lb [67.8 N-m]
Washer (qty)	As-supplied[2]	1/2" Flat Washer, TY B, Narrow, (12)
Lock nut (qty)	As-supplied[2]	1/2"-13 UNC Nylon Insert Nut (6)

Note: 1) Torque calculations assuming Loctite 34026 (Anti-seize) for lubrication.
2) The hardware supplied will be 316 SS, other grades are listed in case there is a change in the field.

Read carefully! Failure to follow procedure may damage components.

WARNING

Each VBR (PN 83107809VB) & Interface Adaptor (PN: W10052901) is heavy (~45 lb [20.4 kg]), use two persons to lift each half and do not allow fingers to be pinched when joining halves together. Caution, the Interface Adaptor and VBR's are heavy and will crush fingers if not handled properly.

1. Using two persons, remove the 3/8-16 Socket Head Cap Screws from the interface adaptor. You will be removing 2 Socket Head Cap Screws total.

2. Using two persons, place one Interface Adaptor half onto the Technip 4" Vertebrae Connection Ring (PN: GSxxx rev A). The VBR Adaptor is designed to only go on the connection ring one way, if the part does not fit, flip the adaptor over, as you have it on backwards. Then place the other half of the Interface Adaptor on the Connection Ring (PN: GSxxx rev A).

3. Reinstall the 3/8-16 Socket Head Cap Screws using 35 ft-lb [47.45 N-m] torque. Note: The 3/8" bolts are installed for ease of installation, the VBR hardware will keep the assembly functional.

4. Place the socket (see Figure 3) of a VBR half around the VBR Interface Adaptor (see Figure 1), ensuring that the Interface Adaptor lies within the VBR socket groove.

5. If necessary, clean the bolt threads with a stainless steel wire brush and apply lubricant to the threads.

CAUTION

If you are using stainless steel bolts, only use a stainless steel wire brush. Using a carbon steel brush on stainless bolts will cause rapid corrosion.

6. Insert Hex Head Bolts into the VBR bolt holes. Refer to Table 1 for Torque values.

a. Ensure each bolt has a Flat Washer between the head of the bolt and the VBR.

b. Ensure each nut has a Flat Washer installed between the nut and the VBR.

7. Using a second man, place the socket of the second VBR half around the Interface Adaptor ensuring that the VBR halves are properly aligned and come face to face, see Figure 1.

8. Place a Flat Washer and then a Locking Hex Nut onto each of the protruding bolts.

9. Screw each bolt (6 total) into the nuts until they are hand tight using the Socket.

10. Repeat procedure for the remaining VBR bolt holes.

11. Using the torque wrench, torque all bolts to the specified torque listed in Table 1.

12. Inspect the assembled VBR segment by rotating it about the flexible. Proper installation will offer no resistance and should spin freely. The VBR installed over the VBR Interface adaptor may have a snug fit, this is acceptable.

13. Make-up the next VBR pair as follows: Locate a VBR pair to install.

14. Place the VBR groove (see Figure 3) of a VBR half around the previously installed VBR rib (see Figure 3).

15. Repeat steps 8-14 for the remaining VBR halves until the required quantity of VBR segments have been installed per job specifications and string assembly quantities. Refer to shipping documentation or the specific assembly diagram for the particular job.

16. Assemble the VBR End Cap (PN 83107809EC) onto the last VBR segment following steps 14-15 for the VBR End Cap.

17. Inspect the assembly to ensure that the Interface Adaptor, VBR End Cap, and correct quantities of VBR segments have been installed per job specifications. Refer to shipping documentation or project General Assembly print.

18. Inspect the Flexible to ensure that it is functioning properly and that it is free of kinks and obstructions.

You have now completed the assembly of a complete VBR string.

Figure 2 - VBR End Cap Termination

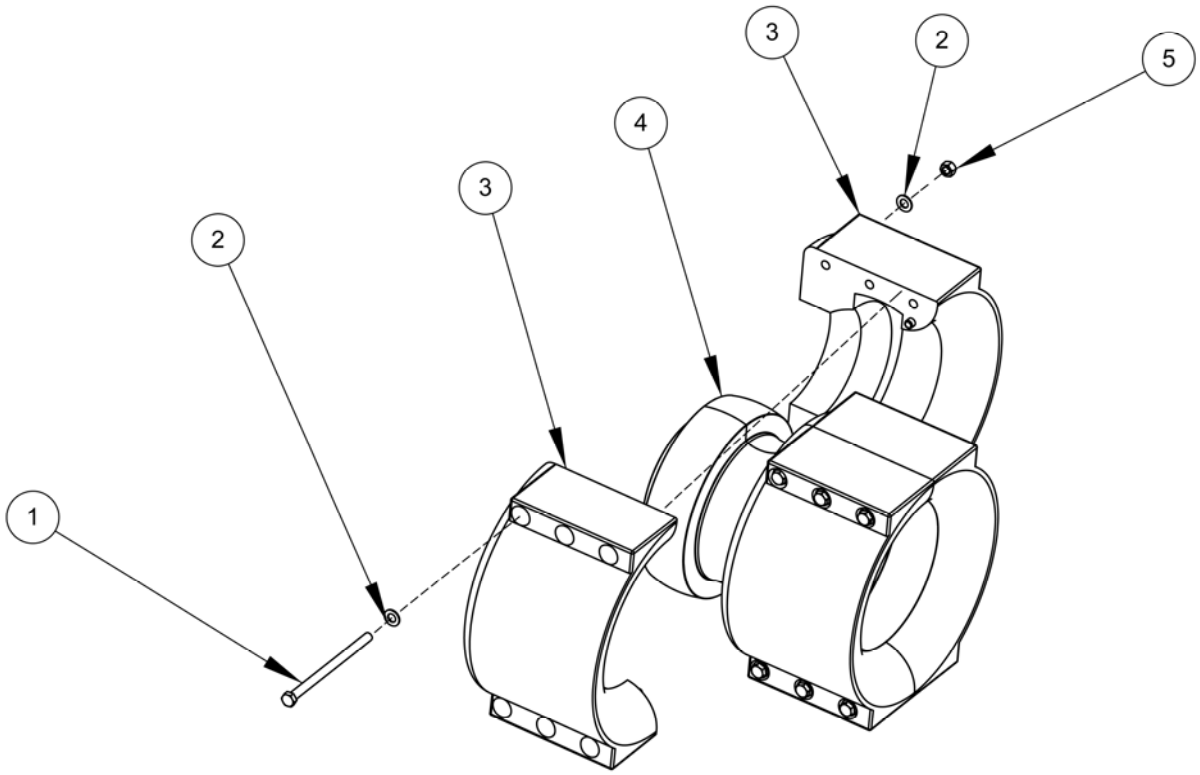

Item NO.	Part Number	Description
1	STOCK	½”-13 UNC X 4 ½” HEX HEAD BOLT
2	STOCK	∅ 1/2” FLAT WASHER, NARROW, TY B
3	83107809EC	VBR END CAP
4	83107809VB	78” Min. LOR – VBR (Shown as an assembled set)
5	STOCK	½-13 UNC Nylon Insert Nut

4. Appendix

Figure 3 - Generic VBR String Assembly Diagram

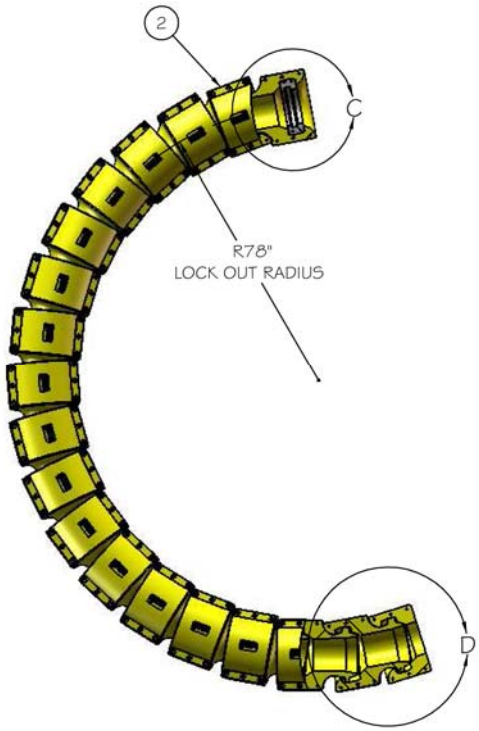

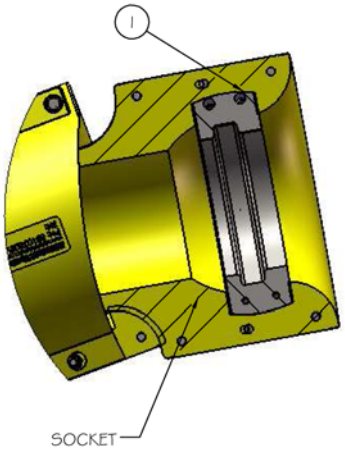

DETAIL C
SCALE 1 : 12

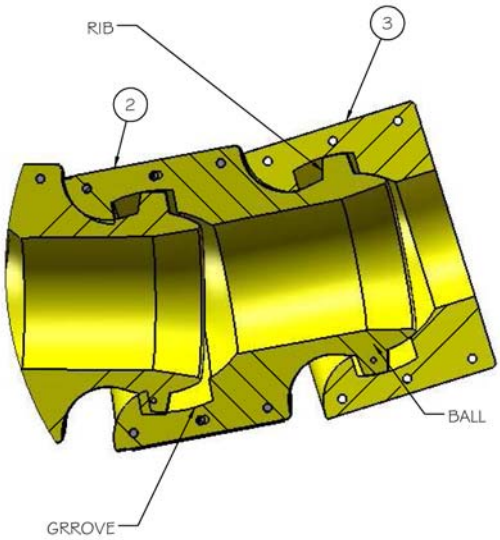

DETAIL D
SCALE 1 : 12

Item NO.	Part Number	Description
1	W10052901	8” VBR Interface Adaptor
2	83107809VB	VBR (half)
3	83107809EC	VBR End Cap (half)

Technip

CDP

Friction Clamp Protection

Assembly Procedure

Document No HO-W6226-EN-002, Rev 01

Confidentiality Statement

This document contains confidential information.
All rights (including copyright, confidential information, trade secrets and design rights) are owned by Trelleborg Offshore US, Inc. No use or disclosure is to be made without prior written permission of Trelleborg Offshore US, Inc. Copyright 2010 Trelleborg Offshore US, Inc. All rights reserved.

Trelleborg Offshore US, Inc.
519 N. Sam Houston Parkway E., Suite 200, Houston, TX, 77060 USA
Tel: +1.832.456.8300 Fax: +1.281.999.3451 www.trelleborg.com

Revision List

Rev No	Issue Date	Prepared		Checked		Approved	
		Name	Sign	Name	Sign	Name	Sign
01	06.17.10	V. Mansueto	VM	J. Vultaggio	JV	J. Vultaggio	JV

This document contains confidential information. All rights (including copyright, confidential information, trade secrets and design rights) are owned by Trelleborg Offshore US, Inc. No use or disclosure is to be made without prior written permission of Trelleborg Offshore US, Inc. Copyright 2010 Trelleborg Offshore US, Inc. All rights reserved.

Table of Contents

1 Introduction 4
2 Reference Drawing 5
3 General Configuration Explanation 5
4 Installation Procedure 6

This document contains confidential information. All rights (including copyright, confidential information, trade secrets and design rights) are owned by Trelleborg Offshore US, Inc. No use or disclosure is to be made without prior written permission of Trelleborg Offshore US, Inc. Copyright 2010 Trelleborg Offshore US, Inc. All rights reserved.

1 Introduction

Technip has requested Trelleborg Offshore US, Inc to supply an impact protection system for use over the 6 inch friction clamp.

This document describes the installation of impact protection onto the friction clamp.

NOTE:-

The information presented in this document provides guidelines recommended to be followed during the handling and installation of the impact protection assemblies. The final method of assembly is outside Trelleborg Offshore US, Inc.'s supply and as such the actual assembly, installation procedure and sequence adopted is the responsibility of the Installation Contractor.

This document contains confidential information. All rights (including copyright, confidential information, trade secrets and design rights) are owned by Trelleborg Offshore US, Inc. No use or disclosure is to be made without prior written permission of Trelleborg Offshore US, Inc. Copyright 2010 Trelleborg Offshore US, Inc. All rights reserved.

2 Reference Drawing

The following drawings have been generated for this project and should be referenced in addition to this procedure:

DRAWING NUMBER	Description
642010-03	Element Assembly Details
642010-01	General Arrangement

3 General Configuration Explanation

The impact protection will be shipped on pallets as two sub-assemblies. The sub-assemblies will need to be lifted from the pallet, properly oriented and assembled onto the friction clamp. The protection assemblies are designed to interface with the padeyes on the parallel flat surfaces of the friction clamp.

In addition to the impact protection sub-assemblies the following components are also provided:

i. 4 No. 1-8 UNC x 5.5 Hex Bolts
ii. 8 No. 1-8 UNC Hex Nuts

This document contains confidential information. All rights (including copyright, confidential information, trade secrets and design rights) are owned by Trelleborg Offshore US, Inc. No use or disclosure is to be made without prior written permission of Trelleborg Offshore US, Inc. Copyright 2010 Trelleborg Offshore US, Inc. All rights reserved.

4 Installation Procedure

It is recommended that the assembly be lifted by wrapping a lifting strap around the center tube and out the end underneath the cross bar at each end of the sub-assembly, see Figure 4-1.

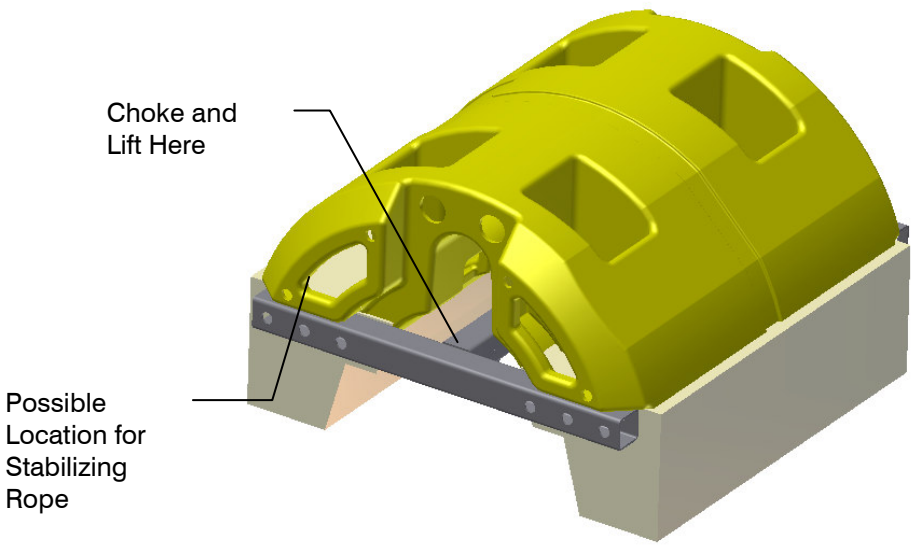

Figure 4-1 - Isometric View

Considering the center of gravity lies very near the center tube, see Figure 4-2 and Figure 4-3, and the assembly will likely try to rotate about the lifting points stabilizing ropes should be looped through the most convenient holes in the PE shell for use in orienting and stabilizing the sub-assembly during lifts and installation. At no time should the weight of the assembly be lifted by any straps or hooks connected to the PE shell; the shell material is not suitable for such loads.

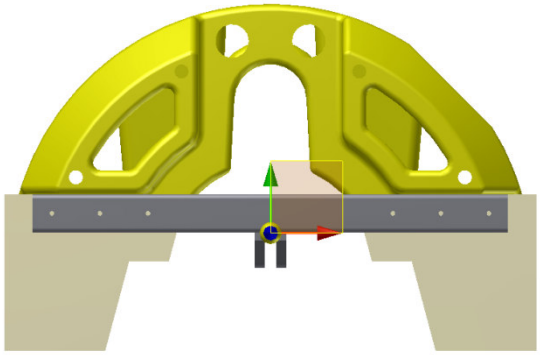

Figure 4-2 - Location of CG (End View)

This document contains confidential information. All rights (including copyright, confidential information, trade secrets and design rights) are owned by Trelleborg Offshore US, Inc. No use or disclosure is to be made without prior written permission of Trelleborg Offshore US, Inc. Copyright 2010 Trelleborg Offshore US, Inc. All rights reserved.

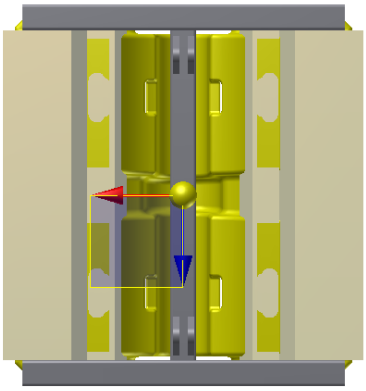

Figure 4-3 - Location of CG (Bottom View)

The first sub-assembly shall be oriented to match the orientation of one pair of padeyes on the friction clamp and presented to the clamp such that the padeyes attached to the sub-assembly straddle the padeyes on the friction clamp, see Figure 4-4.

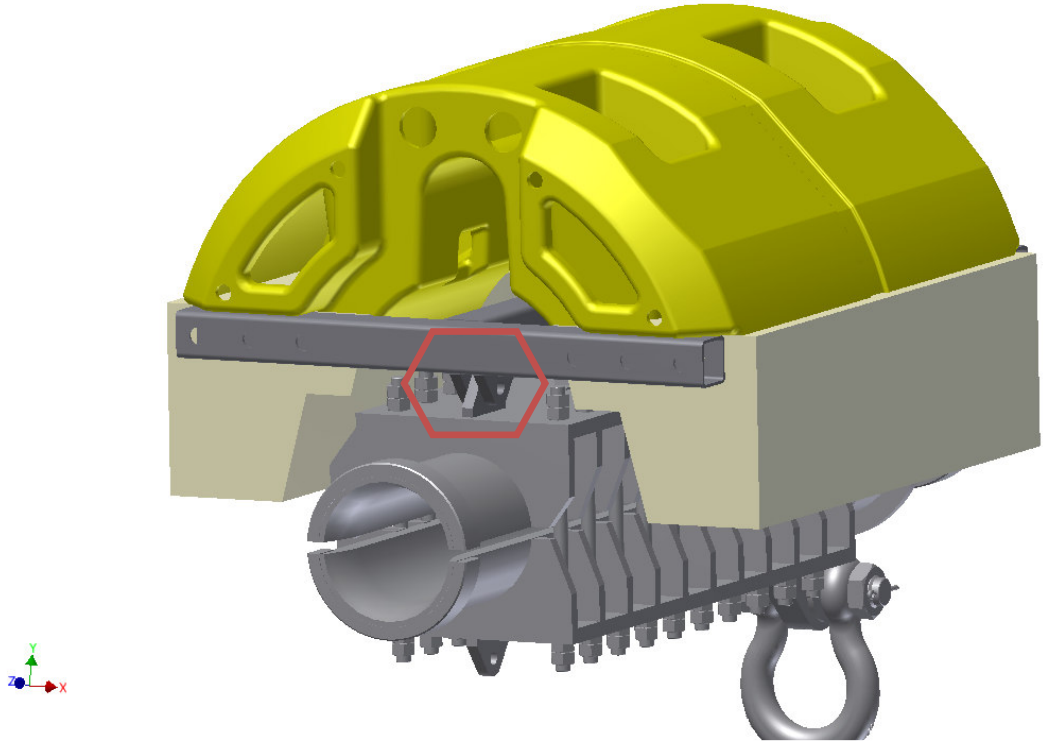

Figure 4-4 - Sub-assembly proper orientated such that padeyes interlock

This document contains confidential information. All rights (including copyright, confidential information, trade secrets and design rights) are owned by Trelleborg Offshore US, Inc. No use or disclosure is to be made without prior written permission of Trelleborg Offshore US, Inc. Copyright 2010 Trelleborg Offshore US, Inc. All rights reserved.

Pre-apply thread locking compound onto two of the supplied hex bolts. Insert one (1) hex bolt through the first set of the padeyes and install a nut on the opposite side and bring to hand tight or snug with a wrench. Insert the second hex bolt through the remaining set of padeyes and install a nut on the opposite side.

Torque the nuts to 200 – 250 ft-lbs.

Install and torque a second nut behind the already installed nuts to act as jam nuts.

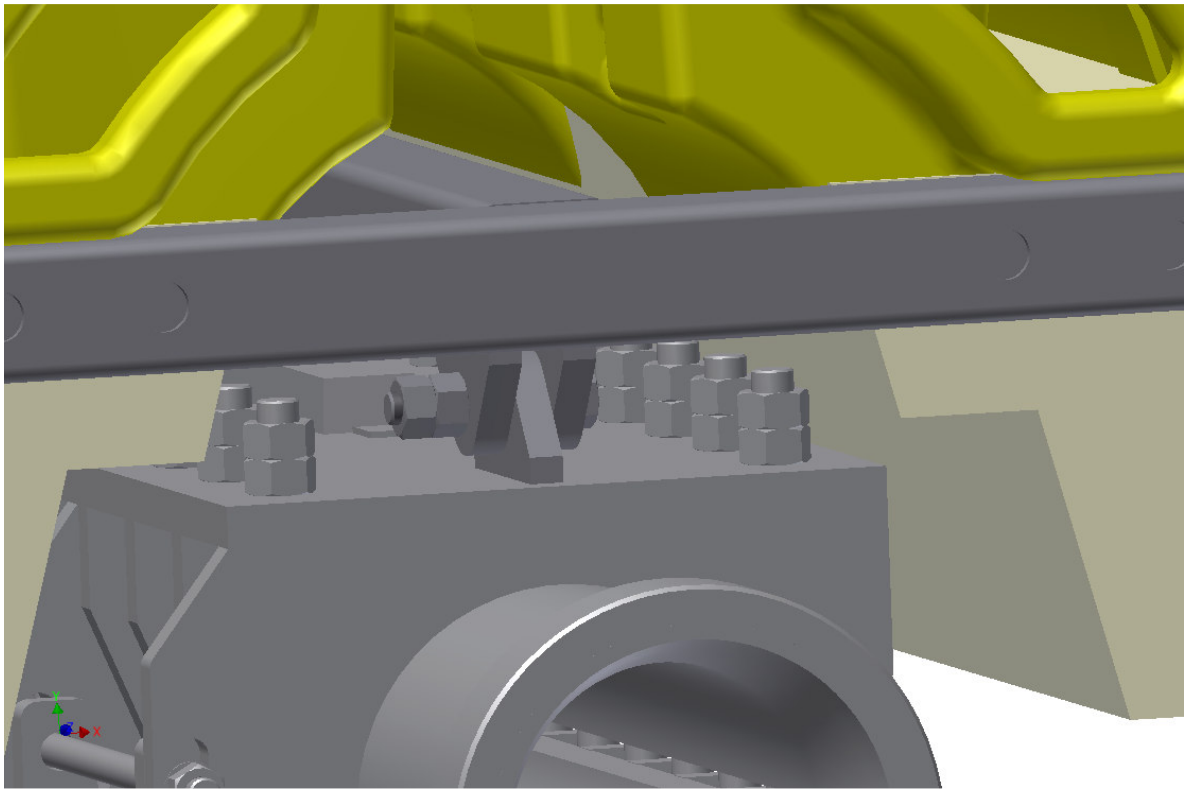

Figure 4-5 - Installed view of hex bolt, nut, and jam nut

Repeat the above procedure to install the second impact protection sub-assembly.

This completes the installation of the impact protection assembly.

This document contains confidential information. All rights (including copyright, confidential information, trade secrets and design rights) are owned by Trelleborg Offshore US, Inc. No use or disclosure is to be made without prior written permission of Trelleborg Offshore US, Inc. Copyright 2010 Trelleborg Offshore US, Inc. All rights reserved.

MC252 Demobilization Project

for

MC252-1

Equipment Demobilization Evidence Preservation and Tracking Procedure

For Internal Use Only

0	11/3/2010	Issued for Use	Michael Higgins
REV	**DATE**	**DOCUMENT STATUS**	**PREPARED BY**
PRINT DATE	3-Nov-10	**Document Number**	2200-T2-DO-PR-4831

MC 252 Demobilization Project

Equipment Demobilization
Evidence Preservation & Tracking Procedure

0	10/29/2010	Issued for Use	Martin Pabon / Keith R. Powell	Charles Taylor
0	10/27/2010	Issued for Use	M. Pabon	S. Rettie
Rev	Date	Document Status	Custodian	BP EA/Authority

Document	Organization ID	Sector ID	Discipline ID	Document Class	Sequence Number	Document Revision
Control Number	2200	T2	DO	PR	4831	0

AMENDMENT RECORD

Amendment Date	Revision Number	Amender Initials	Amendment
10/27/2010	0		Issued for Use
10/29/2010	0	KRP	Revised Reviewer Sign-off page to reflect Evidence Preservation SPAs as Authorizers. Revised Equipment Demobilization Flowchart. Corrections to "Notification" list. Addition of manifest and bar coding naming convention. Added inspection / ID tagging details to equipment handling procedures. Misc. spelling and formatting.

REVIEWER SIGN-OFF			
	Type Name	Date	Sign (if required)
Prepared By	Michael Higgins **Logistics Lead**	11/03/10	BRIAN CALHOUN ON BEHALF OF MICHAEL HIGGINS
Custodians / Owners	Martin Pabon **Engineering and Subsea Lead**	11/03/10	
	Keith R. Powell **Deputy SPA - Evidence Preservation**	11/3/10	
Reviewer (s)	Kenneth Harris **Quality Lead**	11/3/10	
	Frank Monago **Legal Lead**	11/03/2010	
	Mike Harville **Subsea Installation Lead**	11/3/10	Mike Harville
	Bernadette Coney **PSCM Lead**	11-3-10	
	Stuart Rettie **Project General Manager**	03NOV10	
Authorizer	Charles Taylor **SPA - Evidence Preservation**	11-3-10	

TABLE OF CONTENTS

1 Introduction 4

2 Equipment Demobilization Flowchart 6

2.1 Inventory Management for Equipment Recovered Topside 8

2.1.1 Equipment Inventory Offshore to Onshore Facility 8

2.1.2 Onshore Receipt at Fourchon Heavy Lift 10

2.1.2.1 Example of FSR Handover at Fourchon Heavy Lift 11

2.1.3 Receipt and inventory at Dedicated ASCO Facility 12

2.1.3.1 Overview 12

2.1.3.2 Inventory Process 14

2.2 Master Inventory List / Guidance on Certification (GoC) and Chain of Custody 16

2.2.1 Chain of Custody Form (Figure 3) 16

2.2.1.1 Procedure to Complete Chain of Custody Form 16

1 Introduction

During the MC252 incident response, BP installed several temporary pieces of equipment in the water column, and on the seabed, for the purposes of containing flow from the well, monitoring the well, monitoring subsea work activities, and ultimately killing the well. The purpose of this document is to define the procedure for tracking the equipment recovered from the MC 252 incident site and the items remaining onshore that were not used during the incident response.

The temporary pieces of equipment installed during the MC 252 incident response include: manifolds, flexible pipe, suction piles, free standing risers, top-hats, floating hoses, 3-ram capping stack, well test containment and metering systems and surface vessels, among other items. The MC 252 wellbore items that will be recovered include the BOP, LMRP, casing, tubing, wellbore fluid samples, recovered fish, etc. BP's objective is to release the surface vessels from contract and to recover as much of the temporary equipment as practicable. The equipment that is recovered, as well as the equipment in inventory that is intended for future response capability, will be refurbished and repaired, as necessary, and then preserved and stored at established locations.

It is critical that the policy and procedure governing the recovering and disposition of equipment continue to comply with existing legal hold notices. This policy and procedure governs the preservation and disposition of all items of equipment subject to a BP Legal Hold Notice, on account of their association with the MC 252 incident in the Gulf of Mexico. The principle guiding this policy is that all items of equipment subject to a BP Legal Hold Notice are to be documented and retained as potential evidence until either (a) the conclusion of all legal proceedings, or (b) the documented issuance of a formal Legal Clearance from BP Legal. To that end, a proper chain of custody must be established for every item of equipment subject to a BP Legal Hold Notice.

Note: A statement by government officials that they do not want to take custody of a given item as evidence does not relieve the effect of the legal hold established by this notice, and prior notices. Such relief becomes effective only upon formal legal clearance from BP Legal.

An overview of major systems, components, and vessels that will be removed from the site is show below in Figure 1.

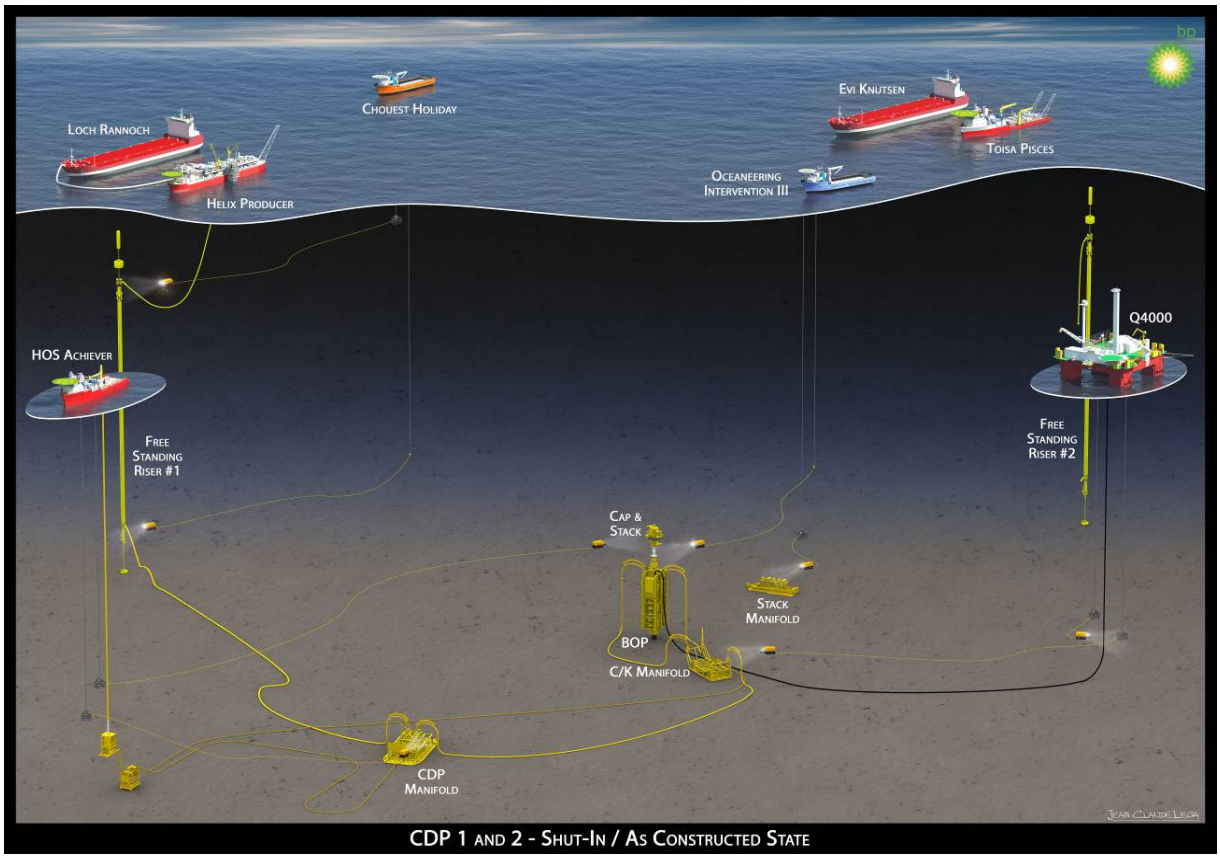

Figure 1: MC252 Macondo Vessels and Major Subsea Equipment

2 Equipment Demobilization Flowchart

The MC 252 Macondo Equipment Demobilization Flowchart is shown below, in Figure 2. Notes and points of contact are listed following, in Table 1.

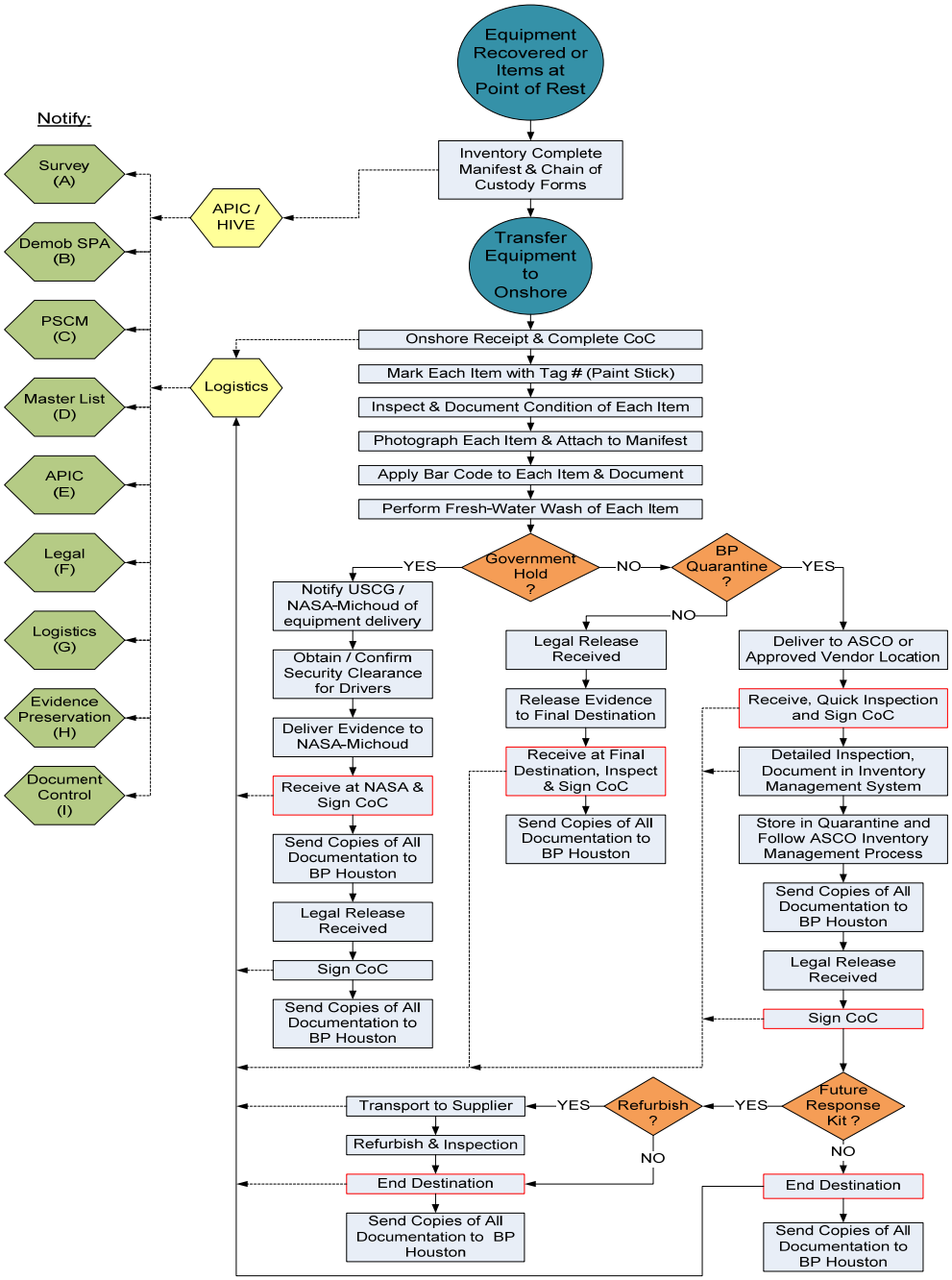

Figure 2: MC 252 Macondo Equipment Demobilization Flowchart

Table 1: Personnel to Notify

Notification Category	Category Sub-Category	Contact Name	Contact Email
A	Survey	Jonathan Davis	Jonathan.Davis@bp.com
B	Freestanding Riser	Vicki Corso	Vicki.Corso@bp.com
	Flexibles / Manifolds	Ron Berger	Ron.Berger@bp.com
	Hydrate Inhibition System	Ben Coates	bcoates@technip.com
	Source Control	Brian Young Richard Harland	brian.j.young@bp.com harlanrw@bp.com
C	PSCM	Bernadette Coney Donn Topper	bernadette.coney@bp.com Donn.Topper@bp.com
D	Demobilization Master Equipment List	Amanda Smelser Mohan Neelam	asmelser@technip.com mneelam@Technip.com
E	APIC	TBD	TBD
F	Legal	Frank Monago David Grassmick	Monaf0@bp.com dgrassmick@kirkland.com
G	Logistics	Michael Higgins Brian Calhoun	michael.higgins@ascoworld.com Brian.Calhoun2@bp.com
H	Evidence Preservation	Charles Taylor Keith R. Powell	Charles.Taylor@bp.com Keith.Powell@bp.com
I	Document Controller	Wanda Rodgers	Wanda.Rodgers@bp.com

2.1 Inventory Management for Equipment Recovered Topside

2.1.1 Equipment Inventory Offshore to Onshore Facility

Items being removed from deployed locations, and recovered per the BP set of procedures, will follow the below for equipment inventory and processing:

- Equipment should be identified and itemized as items are pulled from deployed locations.
- Itemized details should be noted on BP MDP Manifest, as per standard offshore practices. The manifest should detail all items being transported, and offer detailed descriptions matching those noted on the BP Demobilization Master Equipment List, as well as quantities and detailed information on the basket, container or bolster that the cargo is loaded into.
- Manifest naming should follow the naming convention as outlined in Table 2. This will keep track of transportation activity and link all items back to the original Manifest.
- Items predetermined as Evidence for the JIT need to be clearly identified on both the Manifest, and physically marked on the material, as "MC-252 EVIDENCE – DO NOT OPEN OR TAMPER WITH."
- Upon Manifest completion, e-mailed copies will be sent to the Materials Coordinator, at Fourchon Heavy Lift, and the Logistics Lead(s) for the demobilization efforts.
- **In addition, all items are subject to legal hold Chain of Custody procedures, regardless of their intended final destination.**
- For items that have known destinations for repair or rework, the Materials Coordinator and Logistics Lead will coordinate transport from the supply vessel to conveyance, and arrangements will be communicated back to all parties. Those items may be conveyed from BP custody only when released from the legal hold by BP Legal. No retrieved item may be altered (by repair or rework) until cleared from the legal hold by BP Legal.
- All other items shall remain directly in BP's custody, which may include shipment to a BP dedicated warehouse located in Houston at the ASCO facility.
- Items may be released from BP controlled shore facilities (BP controlled warehouse or Fourchon Heavy Lift) in only two circumstances: (a) in response to instructions indicating that the items are evidence subject to transfer to designated Joint Investigation Team; or (b) in response to the documented issuance of a formal Legal Clearance from BP Legal.
- In the case of a formal Legal Clearance from BP Legal, the storage site shall complete the final section of the chain of custody form (BP Legal Release for Final Disposition) indicating that the items have been transferred to control of the authorized vendor or end user. No item may be released from Legal Hold absent specific written or email communication releasing the item.

Table 2: Manifest / Split Manifest Naming Convention

Manifest Type	Manifest No.	Transport Activity
Original	**xxxxx**	**Original manifest from MC 252 to FHL**
1st Split	**xxxxx-A**	**Split load sent from FHL to Major Equipment (for cleaning)**
	xxxxx-B	**Split load sent from FHL to ASCO**
	xxxxx-C	**Split load sent from FHL to Vendor 1**
	xxxxx-D	**Split load sent from FHL to Vendor 2**
2nd Split	**xxxxx-A-1**	**Split load sent from FHL to Major Equipment to NASA**
	xxxxx-A-2	**Split load sent from FHL to Major Equipment to ASCO**
	xxxxx-B-1	**Split load sent from FHL to ASCO to NASA**
	xxxxx-B-2	**Split load sent from FHL to ASCO to Vendor**
	xxxxx-C-1	**Split load sent from FHL to Vendor 1 to ASCO**
	xxxxx-C-2	**Split load sent from FHL to Vendor 1 to NASA**
	xxxxx-D-1	**Split load sent from FHL to Vendor 2 to ASCO**
	xxxxx-D-2	**Split load sent from FHL to Vendor 2 to NASA**

2.1.2 Onshore Receipt at Fourchon Heavy Lift

- In all cases, Fourchon Heavy Lift will comply with legal hold procedures. Items may be released to third parties (e.g. suppliers) only when released by BP Legal and only when Chain of Custody procedures have been followed. Items may be shipped to other BP controlled facilities, so long as legal Chain of Custody forms are completed documenting that control of the item has been shifted to a new BP facility. Items may be disposed of only with clearance from BP Legal.
- Fourchon Heavy Lift (FHL) will take the advanced manifest received from the demobilization vessels and will start the process of planning, per normal operating procedures.
- Items received from BP provided supply boats, from the MC 252 zone, will need special attention to document exactly what is received and keep exact records for complete inventory tracking and legal evidence. Persons receiving items at FHL will work closely with onsite Kirkland & Ellis legal assistants to maintain proper Chain of Custody forms. Kirkland & Ellis legal assistants will provide assistance to FHL, and other personnel, in completing all Chain of Custody documentation.
- Cargo should be verified against the vessel manifest immediately upon receipt. If there are any discrepancies, action should be taken to notify BP and the Logistics Lead.
- The key will be the manifest tracking ID assigned by the demobilization vessel. This manifest number should be used as the receiving number. It will be the basis for all equipment tracking from shore base to final destination.
- The Manifest number will link to the individual carriers, provide additional tracking on outbound cargo and provide ongoing Chain of Custody signatures, from start to finish.
- Every piece of equipment will be marked with a unique Tag Number (paint stick).
- BP Inspector will inspect every piece of equipment and document the condition upon receipt at FHL.
- Every individual item will be photographed by assigned / approved photographer at time of inventory against the prepared manifest.
- ASCO Representative will apply a Bar Code to each piece of equipment for Inventory and Tracking.
- A Fresh Water Rinse will be performed on every piece of equipment.
- Equipment can be readied for transportation to the next destination.
- If immediate conveyance is not available at time of supply boat discharge, it should be noted that items should be kept together by manifest ID number and, if possible, separated from other project cargo.
- Copies of all documentation will be forwarded to BP Houston. This will be used to update the BP Demobilization Master Equipment List, and maintain a copy of all critical documentation, in the event documentation is damaged or lost during the handling process.

2.1.2.1 Example of FSR Handover at Fourchon Heavy Lift

- Michael Ritchie receives update from West Sirius of equipment retrieved from Subsea.
- BP Technical Representative on West Sirius completes GOC System Handover Sheets and attaches relevant reports and punch lists.
- West Sirius completes Manifest for equipment loaded onto Offshore Service Vessel and transmits it to Michael Ritchie, with GOC Sheets and Chain of Custody Forms.
- Offshore Service Vessel offloaded at Fourchon Heavy Lift (FHL) into 'Receiving Area'.
- Michael Ritchie compares GOC Sheets and Manifests, and signs the Chain of Custody Forms as 'Received'.

Note: The <u>ORIGINAL</u> Chain of Custody (CoC) form must accompany the CoC item(s) at all times. All signatures must be on the ORIGINAL CoC forms, and not on facsimiles, nor scanned copies.

- Michael Ritchie and Ernie Peoples verify traceability.
- Michael Ritchie signs GOC acknowledging completion of scope by Demobilization Team.
- Ernie Peoples reviews the GOC and Manifest, and signs acknowledging transfer to Engineering and Subsea Team.
- Ernie Peoples and BP Inspector (Eric Beckford) mark equipment with Tag Numbers (paint stick) and take photos. In addition, BP assigned / approved photographer will photograph **<u>every</u>** individual item.
- ASCO Representative will apply a Bar Code to **<u>each</u>** piece of equipment for Inventory and Tracking.
- Equipment can now be moved from 'Receiving Area' to 'Staging Area.'
- Equipment moved and Fresh Water Rinse performed:
  - Equipment is to be rinsed with low pressure fresh water source (< 75-psi).
  - Only accessible external surfaces are to be rinsed.
  - Equipment shall not be lifted during rinsing operations.
- Transportation request made to ASCO by Ernie Peoples. (Destination made by Product Lead and stated on BP Demobilization Master Equipment List.)
- Manifest, or Sub-Manifests, generated by ASCO.
- Chain of Custody Forms signed as 'Released' by Ernie Peoples and 'Received' by the Conveyance Driver, as equipment leaves FHL.
- Ernie Peoples to document status (GOC signed / tag numbers applied by paint stick / receipt inspection performed / photographs taken and attached to manifest / ID of bar code tag applied / fresh-water rinse performed / manifest(s) / Chain of Custody Forms signed):
  - Michael Ritchie of 2H is located at FHL to assist with FSR equipment identification and receiving assurance within the Demobilization Team.
  - Ernie Peoples, of JPK, is located at FHL to represent the Engineering and Subsea Team with equipment transfer and identification.

Note: Non-GOC Equipment, such as Transportation or Installation Aids, will follow a similar process, without the GOC Sheets.

2.1.3 Receipt and inventory at Dedicated ASCO Facility

2.1.3.1 Overview

BP/ASCO Dedicated Facility with Offices and 1-Acre Laydown Yard

- Facility is approximately 40,000-sq.ft. and located in the Greensport Terminal Complex.
- Facility offers deepwater berthing, barge terminal, shore cranes to 300-tons.
- Being in the Greensport Park, all water access is only a few blocks away and use of private roadways within the Park have no permit restrictions 24/7.
- Facility has high ceilings with 50-ton overhead cranes and certified rigging.
- Facility has centrally monitored surveillance, motion detectors and infrared cameras.
- Dedicated offices (x2) for BP inspection. Offices are temperature controlled with facilities, phone lines and internet access.
- Facility is not in a flood zone (200-year FEMA rated).
- Facility has guarded entrances 24/7 to Coast Guard regulations with monitored security system in the warehouse.
- 480v Power available, Halogen Lighting throughout.

Facility Shipping details:

BP MDP Project

c/o ASCO Freight Management, LLC

1755 Federal Rd

Houston, Texas 77032

Contact Information:

Vice President Operations

Michael Higgins

Cell - 713 539 9223

Email - Michael.higgins@ascoworld.com

Account Coordinator

Lilly Mata

Tel: - 713 450-4903

E-mail – Lilly.mata@ascoworld.com

Figure 3: ASCO BP Warehouse – Facility Map

Figure 4: ASCO BP Warehouse – Covered Building and Storage Yard

2.1.3.2 Inventory Process

Pre-mobilization of Equipment

1. ASCO will receive the manifest from onshore facilities and use the manifest ID as a reference for inbound material.
2. ASCO will enter all data into the system prior to cargo arrival (where possible) in order to assist in the check-in process.

Receiving / Checking Process

1. All cargo will be immediately received as a shipment into the system and given unique bar code identification. (See below for example bar code tag.) The cargo will then be staged for checking.

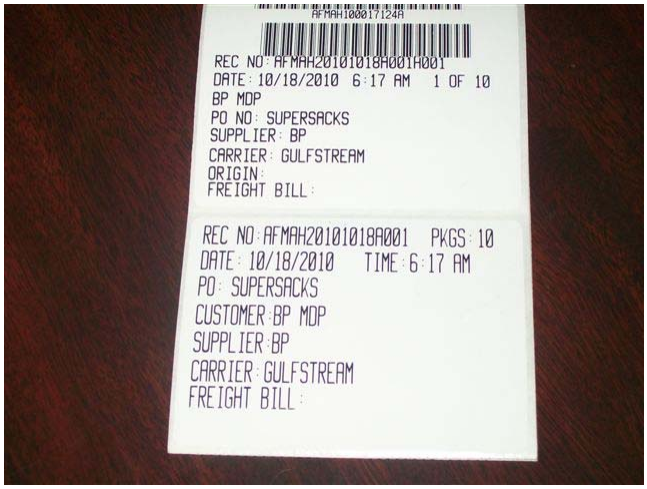

Figure 5: Example of ASCO Bar Code Label

MR (Material Receipt) Number = company ID/Year/Month/Day/Receiving number for the day/package #.

IE – AFMBP/2010/10/18/A0001/H0001

This is a computer generated number and can not be changed or manipulated and is unique to the package or handling unit.

2. ASCO will provide line item checking against the Manifest provided by the onshore facility or vendor facility, and also against the BP Demobilization Master Equipment List.
3. If no manifest is provided, ASCO / BP will seek guidance to generate proper identification of cargo.
4. ASCO will work with Kirkland & Ellis legal assistants to maintain proper Chain of Custody documentation for all items. ASCO will coordinate Chain of Custody efforts upon receipt of items and through the bar code and identification process.
5. Once the identification process is complete, all cargo will then be issued a formal Material Receipt (bar code controlled) to BP.
6. Cargo will then be pre-staged for further inspection, if required.

7. Special consideration will be taken to get all serial numbers of components. BP QA / QC to specify exactly what data is to be recorded for traceability to original IRC and document filing.
8. Copies of all documentation will be forwarded to BP Houston. This will be used to update the BP Demobilization Master Equipment List, and maintain a copy of all critical documentation, in the event documentation is damaged or lost during the handling process.

QA/QC inspection

1. Vendor and or BP QA / QC to complete a full inspection of all materials to assess whether equipment is to be repaired / replaced / refurbished.
2. ASCO will manage an inspection process with the vendors and BP QA / QC whereby all requirements for material storage or staging is identified and cargo is categorized for designated storage locations.
3. All items are presumed to be covered by legal holds. Items will be stored and released in one of the following categories. Items may be released only upon approval from BP Legal, with such approval noted on the Chain of Custody Form for the item.

    a. Continued Legal Hold / Quarantine.
    b. Future Response Kit.
    c. Non–Future Response Kit.
    d. Dispose.

Storage

1. Items will be stored in a safe manner, making the best utilization of space and allowing for ease of identification, checking and retrieval (and by segregation as noted above).
2. Items will be stored with due regard to offer protection from damage, using specialized protection or controlled environments as required.
3. All items in storage will have identification or "Material Receipt Number," with unit of issue and location point allocated.
4. Material Receipt Numbers and location information will be recorded within the Warehouse operating systems.
5. Large, bulky, heavy or abnormal items may require external storage and / or handling by a crane.
6. Items requiring special handling baskets or bolsters will be identified so the handling equipment can be sourced by ASCO or BP.
7. All special handling equipment will be prepared and cargo will be stored in these units for safe handling and long term storage.
8. Certain items will require unique storage procedures. These procedures will be written on a cargo-specific basis and attached as addendum to the storage Matrix. These procedures will be signed off by the supplier and BP QA / QC representatives.
9. For future reference, the ASCO Barcode System can be linked to MAXIMO for increased visibility to the BP organization.
10. Copies of all documentation will be forwarded to BP Houston. This will be used to update the BP Demobilization Master Equipment List and maintain a copy of all critical documentation.

2.2 Master Inventory List / Guidance on Certification (GoC) and Chain of Custody

The main goal of the MDP Master Inventory is to define the regulatory legal status, and track the transit and final location details, for main components utilized in the offshore response.

ASCO will manage the completion of this list through a review process of the manifests generated for each transaction. All items will be cross-checked to the BP Demobilization Master Equipment List and the transactions will be recorded for future reference.

For all items, Chain of Custody Forms shall be maintained as per the details noted below. **In no case will an item be released until such release has been cleared through BP Legal.**

2.2.1 Chain of Custody Form (Figure 3)

2.2.1.1 Procedure to Complete Chain of Custody Form

- Chain of custody forms completed offshore shall be filled in, initially, by consultants from Deloitte in accordance with generally accepted principles for documenting Chain of Custody. The person who initially signs the Chain of Custody Form (to indicate initial possession of the items) shall be the person who is in charge of a particular recovery operation. That person will usually be known as the Person in Charge (PIC). The PIC of the recovery operation has "custody" of this item for Chain of Custody purposes. The purpose of the Chain of Custody Form is to provide a clean hand-off of all items from the initial recovery to subsequent custodians and to indicate the line of custody, beginning from item recovery to ultimate disposition.
- The Chain of Custody Form shall be completed in a manner that reflects best practices for documenting Chain of Custody. The initial completion of the form should provide enough information so that a reader can:

  a. Know who took initial custody of the item;
  b. Identify generally where the person was when they took initial custody;
  c. Provide a means so that someone onshore can identify those items recovered offshore.

  Descriptions must be sufficient so that a person can look at a Chain of Custody Form and a "basket" used to ship items from a recovery vessel and, based on the item description on the Chain of Custody Form, confirm that the items in the basket are what are being discussed in the Chain of Custody. Descriptions should include a physical description of the item, a serial number (where possible), or other discrete descriptors. In all cases where pipe has serial numbers, Chain of Custody Forms shall include the serial number for each segment of pipe. In all cases where pipe joints have serial numbers, Chain of Custody Forms shall indicate those serial numbers.

- The initial description of items should be sufficiently specific that one item (or group of unique items) can be distinguished from another item or group of items. Assume the worst case — baskets reach shore and are mixed or spilled with other items already on shore. A person looking at the item description on the Chain of Custody Form should be able to identify those recovered items described on the form without having the "comfort" or "luxury" of seeing those items sitting in the correct shipping basket. The person on shore confronted with the worst case incident should be able to distinguish the recovered Chain of Custody items from other like-items already on shore. Further, the person confronted with the worst case should be able to connect the recovered items with those items listed on the shipping manifest.
- The initial description on the Chain of Custody Form shall correlate back to the shipping manifest used to send items to shore and to the unique Item Number in the BP Demobilization Master Equipment List that describes, generally, the items in the recovery project. Item descriptions on a Chain of Custody Form should match up with item descriptions for a discrete item (or line) on the shipping manifest (the manifest used to ship the items to shore). Items on the shipping manifest should correlate with items, or lines, on the BP Demobilization Master Equipment List. Chain of Custody Forms must be able to account for each recovered item sent to shore.
- These guidelines are not hard and fast rules. Completion of forms requires exercise of judgment to make sure that Chain of Custody documentation follows best practices. In some cases proper description may require a little more care to account for the unique features (or problems) of an item. For example, the top segment of the free stranding risers will be broken into three segments to be shipped on shore. In that case, there should be a different Chain of Custody Form that accompanies each riser segment because the riser segments will be shipped separately. Although there is a line for the free standing riser on the spread sheet, there will be multiple Chain of Custody Forms to account for the parts of that riser as they are disassembled and shipped. **Whenever items are shipped separately, they need a unique Chain of Custody Form.** That said, any confusion in describing free standing riser components for the upper section is not likely. Descriptions likely can be as simple as "top section of free standing riser recovered from _____ (discrete spot)." On the other hand, pipe sections may all look alike. Further, if a description says "52 pipe segments," that description may not be useful for distinguishing one set of 52 pipe segments (already on shore) from another set of pipe segments (just brought to shore). In such a case, the item description should include serial numbers or other discrete markings in the description for each pipe segment. If necessary, individual "generic" items, like pipe, may be marked or tagged in a non-destructive manner. The preferred method for identifying pipe segments is by serial number. Generally speaking, the more "generic" the item the more imperative the description include something like a serial number or reference to a proper non-destructive label or mark placed on the item.
- The Deloitte consultant should complete a description for each item (at minimum reflecting a line on a manifest) and then have the PIC sign the form indicating transfer to the subsequent custodian. In virtually every case, the "received by" custodian on the first transfer should be the person in charge of the vessel taking the items on shore.
- When items are offloaded from the recovery vessel to a supply vessel or barge for transit, the Deloitte consultant shall make sure Chain of Custody forms are signed by the receiving vessel and that the original form accompanies the items. The Deloitte custodian shall also retain a copy of the Chain of Custody Form and return the form to BP Legal and the BP Evidence Preservation Team.

- The Deloitte consultant shall ensure that all recovered items on a manifest are accounted for on a Chain of Custody Form. No recovered item may leave a recovery vessel until it is accounted for by a Chain of Custody Form. Likewise, all Chain of Custody Forms should connect directly to a manifest entry. The connection between the manifests and the Chain of Custody Forms should be seamless.
- The initial custodian's role is complete when the items and Chain of Custody Forms are transferred to the ship bringing the items on shore.
- The Deloitte consultant shall assure that the initial custodian retains a copy of the executed Chain of Custody Form. The Deloitte custodian shall forward a copy of the forms to BP Legal, to Kirkland & Ellis, and to the BP Evidence Preservation Team. The Deloitte consultant shall also forward copies of shipping manifests to BP Legal, to Kirkland & Ellis, and to the BP Evidence Preservation Team, that connect with each of the Chain of Custody Forms. The Deloitte consultant shall also forward any other documentation that supports the Chain of Custody.
- The Deloitte consultants shall be included in any daily status meetings attended by the PIC (or other recovery team members), including daily status meetings or calls that take place between the PIC and onshore operations personnel. The Deloitte consultants shall be given timely information by the PIC or other BP personnel about all plans and schedules to recover items and to offload items to supply ships, barges, or other transport for shore.
- The Deloitte consultants shall confer daily with Kirkland & Ellis personnel regarding status and plans for recovery.
- The Second Custodian will be the Person in Charge on the vessel bringing items to shore (or any series of such vessels). This person shall usually do two things: (1) sign the initial "received by" space on the Chain of Custody Form indicating that he or she took custody of the items; and (2) sign the "released by" section of the next free row on the Chain of Custody Form when the item is turned over to the shore. They should retain a copy of the executed form for their records, and return a copy of the executed form to BP Legal and to the BP Evidence Preservation Team. They should also assure that a copy of the Chain of Custody Form accompanies all goods delivered to shore.
- The Third Custodian is likely to be the BP team at Fourchon. The Third Custodian should sign the form indicating that the item was received from a transport vessel. The Third Custodian will sort shipment to one of two places:

    1. The government; or
    2. Storage.

Additional procedures shall follow for use of the Chain of Custody Forms on shore.

Chain of Custody Form

This form to be used for custody transfer of material clearly indicating the responsible party during transit from any location to another.

Project Name	**Macando Demobilization Project (MDP)**
Matter Name:	**Items below represent items recovered from Macondo Demobilization Project associated with the well at MC 252. This project is associated with the "Deepwater Horizon" matter.**

Special Instructions

This form must be kept with the item described herein. Please complete the next available chain of custody row to indicate your receipt and disposition of the item.

Original Manifest number	

Description of item: (Physical description to include Master List item number, serial/tag no as available)

Chain of Custody

Item no.	Date / Time	Released By	Received By	Site Location
		Name:	Name:	
		Organization / Location	Organization / Location	
		Signature:	Signature:	
Item no.	Date / Time	Released By	Received By	Site Location
		Name:	Name:	
		Organization / Location	Organization / Location	
		Signature:	Signature:	
Item no.	Date / Time	Released By	Received By	Site Location
		Name:	Name:	
		Organization / Location	Organization / Location	
		Signature:	Signature:	
Item no.	Date / Time	Released By	Received By	Site Location
		Name:	Name:	
		Organization / Location	Organization / Location	
		Signature:	Signature:	
Item no.	Date / Time	Released By	Received By	Site Location
		Name:	Name:	
		Organization / Location	Organization / Location	
		Signature:	Signature:	

BP Legal Release For Final Disposition	Date	Item Final Release To	Item Final Release By	Final Release Purpose	Final Release Authority Given By Person At BP Legal

Figure 6: Chain of Custody Form

Appendix 6: HAZID Findings and Responses

Document Title	Document Number
MC-252 MDP Seafloor Jumper Recovery HAZID Worksheet	4714
Subsea 7 HIRA Worksheet	

MC-252 MDP Seafloor Jumper Recovery HAZID Worksheet

Step No	Key Step	Threat/Cause	Consequence	Safeguards	Action Ref	Action	Status	Responsible	Action Status Description	Comments
	Seabed Recovery									
3	Rig 250Te A&R wire per rigging drawings and lower to 90-ft above sea-bed.	No issues identified.								
4	Helix Express to move to location above 1st end pulling head and set-up on DP (if not already). Lower A&R wire	No issues identified.								
5	ROV to connect ROV hook from A&R wire to wire grommet on clump weight	No issues identified.								
6	Lift clump weight off seabed and towards the flexible enough to enable disconnection from the flexible	Hitting flexible (move too far)		Strap is 12 meters						
7	Once rigging is disconnected, lift clump weight 15-ft off seabed and transit to opposite end of the flexible	No issues identified.								
8	ROV to locate synthetic grommet on end of kick-off spool. The rigging will have a marker buoy attached.	No issues identified.								
9	Hook ROV hook from clump weight rigging onto synthetic grommet on kick-off spool	Connection not made	Drag flexible, potential damage							
10	Land clump weight on seabed clear of the kick-off spool. Disconnect A&R winch from clump weight rigging	No issues identified.								
11	Recover A&R rigging to 15-ft clear of seabed and transit back to pullhead end of flexible	No issues identified.								
12	ROV to connect 60Te hook from A&R wire to synthetic grommet on pullhead Note: Per checklist in section 10.3 verify that any existing rigging being used (per rigging drawing) has been inspected by ROV	Unable to connect to rigging / buried in mud		Dig for rigging with ROV manipulator						
13	A&R to commence hauling in to raise the flexible from the sea bed in addition to vessel moves per the recovery table	Human error - not done per recovery table	Potential to drag flexible / damage flexible	Recovery table in appendix						
14	In conformance with the recovery tables and analysis, the 1st end on the A&R wire shall be recovered to surface, aft of the vessel, for a surface transfer to the aft crane. Note: Hold Point required ensuring GRV has time to discharge pressure in annulus.	Inadequate gas release from annulus		Time required is small relative to operation	4714-1	Consider stating ROV to verify gas no longer coming from the GRV.	CLOSED	TCA	Statement added in step 13 for ROV to observe if any gas bubbles being released from GRV	

	Jumper Recovery to Deck and Spooling onto Portable Reel				4714-2	Add step(s) for removing buoyancy.				
15	Deploy aft crane over stern of vessel with 60-Te ROV hook on short pennant.	No issues identified.								
16	ROV to connect Aft Crane recovery rigging to flexible jumper pulling head rigging.	No issues identified.								
17	Transfer the load of the flexible from the 250-Te A&R winch to the Aft crane wire and ROV to release the A&R winch from the pulling head.	No issues identified.								
18	Bring the flexible flooding pull-head alongside the aft work station with the aft crane.	Drop the flexible - tensioner not able to handle full load without support at other end	equipment damage		4714-3	Ensure that tensioner can handle full load of flexible, clump weight, and jewelry. Consider attaching A&R to the lower end of the flexible or leaving the crane attached.	CLOSED	TCA	Max Dyn. Load of Flexible=37Te, Max Capacity of *Express* Tensioners=60Te. OK	
19	Attach the 20k deck tugger wire to the flexible jumper pulling head rigging.	JSEA issues								
20	Raise the flexible jumper with the aft crane and 20k tugger until the 23-ft of uraduct protection is accessible from the work platform.	No issues identified.								
21	Riggers on the *Helix Express* lay tower work platform cut bands and remove Uraduct protection from around the flexible and store half shells in half height container on the deck. Two containers should be provided.	JSEA issues								
22	Insert flexible into Tri-cat tensioner with the aft crane.	No issues identified.			4714-4	Add note to wash down the flexible at step 22 and remove float ropes, tape, etc. Note any points of damage with pictures and approximate location on flexible.	CLOSED	TCA	Included in step 20	
23	Only Applies to FSR2 Continue Pull-in of flexible until 45-Te friction clamp vertebrae are accessible.	No issues identified.								
24	Only Applies to FSR2 Riggers in work station to remove vertebrae from flexible above and below 45-Te friction clamp using hand tools (torque wrench). Breakout torque value = 50-ft-lbs.	Dropped objects / tools. JSEA issues.								
25	Only Applies to FSR2 Remove vertebrae adapter from friction clamp.	JSEA issues								
26	Only Applies to FSR2 Riggers to remove 45-Te friction clamp protection and 45-Te friction clamp from 6-in flexible in stern work station aided by aft crane.	Dropped objects / tools. JSEA issues.		Chain falls and material handling equipment available						
27	Using the aft crane and 20k tugger to support the flooding/pulling head, transfer the pulling head down to the aft deck.	No issues identified.								

28	At deck level, Install 25-Te friction clamp onto flexible near to 1st end fitting and secure friction clamp to d-rings on the deck with 6-Te lever pulls. **Torque bolts to 632-ft-lbs.**	JSEA issues								
29	Only Applies to FSR2 Riggers to remove the "Appaloosa" flooding head from the flexible jumper using flogging spanners to unfasten the studbolts. Note: Flooding head previously installed using Integra hydraulic bolt tensioners set to 11,000 psi	JSEA issues		Material handling equipment available	4714-5 4714-6	Add note to wash the end fitting and grease the sealing surface. (at both ends) Add line to verify that the Appaloosa head vents are open and clear.	CLOSED	TCA	Has been included in procedure at both sections of procedure	
30	Only Applies to FSR2 Replace the Appaloosa flooding head with standard 7 1/16-in API flange pulling head and shackle suitable for spooling flexible onto storage reel. Ensure the pull-head is fitted with vent holes and ensure all the plugs in the pull head are removed prior to further spooling. Secure head to flange with 16-in long 1.5-in diameter studbolts.	JSEA issues								
31	Connect 1-in transfer wire from 86 Reel to 55-Te Crosby G2140 shackle attached to flexible jumper pulling head.	JSEA issues			4714-7	Change 86 reel to 92 reel.	CLOSED	TCA	Procedure has been updated to say 92 reel	
32	Remove 25-Te Friction clamp from flexible and store clamp on deck. Breakout torque required to release bolts is 632-ft-lbs.	JSEA issues								
33	Start to pay in on flexible to spool flexible onto 92 storage reel. Note: Total length of time for pull in operations shall be at least one hour, with a 15-minute hold period just below the surface for the second end fitting	Gas in annulus not fully vented.	potentiial damage to flexible	Time required is small relative to operation	4714-8	Note that the 15 hold period is for gas release from the annulus	CLOSED	TCA	Explanation added to procedure	
34	Secure the 1st end pull head to the 92 reel by choking the 2 off 3-m slings at the end of the pull head rigging to the reel frame. The attachment should be made to the reel and not the separation	No issues identified.								
35	Continue Pay-in on the flexible both on the reel drive and the 3-track tensioner and cut bands to remove Uraduct sections from flexible as they arrive at the aft work station	JSEA issues								

36	In the event that a level wind mechanism is needed, a dry roller box system is in place that can be fit to the jumper.	Flexible not wound level on the reel	Have to pull out the flexible and rewind	Dry roller box system available						
37	Pull-in flexible until Kick-off spool head arrives at the lay tower work station. Note: During recovery, the flexible will be free flooding. Drain holes in the end of the flexible kick-off spool pull head should allow water to drain from inside flexible during recovery.	Drain holes plugged.		Water / mud comes out on deck.	4714-9	Verify with 2H calculations that water draining out of vents on lower end pull head does not limit the recovery speed.	CLOSED	TCA	Verified from Ron Berger that we will not be limited by the recovery speed of the Helix Express tensioner/reel drive	
38	Rig Aft crane and 20k deck tugger to kick-off spool lift rigging.	JSEA issues								
39	Open Tri-cat tensioner and lift flexible out of tensioner and over the lay chute with the aft crane.	No issues identified.								
40	Lower 2nd end kick-off spool down using the aft crane to deck level and support end of flexible and bend stiffener on temporary polyplank support blocks.	No issues identified.								
41	Remove kick-off spool and Bend Stiffener adapter from flexible end fitting and from bend stiffener flange respectively. Use pneumatic impact wrench to release tension in bolts if required.	JSEA issues								
42	Install 2nd end 7 1/16-in API flange pulling head onto flexible end fitting and secure by flogging bolts tight with pneumatic impact wrench.	JSEA issues								
43	Install 2nd end pull head rigging as per referenced drawing.	JSEA issues								
44	Spool remainder of flexible onto reel per the reel packing procedure and secure the 2nd end onto the reel for transportation and storage using the 2off 3m soft slings and come-alongs as per the referenced drawing.	JSEA issues								
45	Prepare acceptance certificate for jumper and note any punchlist items (e.g. damage, incomplete work, etc.) that should be identified for handover.	No issues identified.								

6.0 HAZID/HIRA - Worksheet

Project Name: MC 252 Deconstruction Project

Procedure Title: **1. Skandi Neptune Mobilization Procedure**

General Activity: **1. Mobilization**

Specific Activity: **1. Core Logistics Base General**

Hazard / Environmental Aspect	Consequence - Hazard Effect / Environmental Impact	Risk Matrix			Existing/Planned Mitigation/Risk Reducing Measures	Residual Risk			Action	Action Party	Action Due Date
		S	P	RR		S	P	RR			
1. Lack of Suitable Facilities	Injury to Personnel	III	C	2	1. Have up to certification of cranes and crane curves	III	E	3			
	Schedule Delay	III	C	2	2. Electricity / lighting is available	III	E	3			
					3. Crane curves are suitable for lifting the umbilical reels. and all other equipment						
					4. Quay has been audited for depth and strength						
					5. Subsea 7 have strong history with Core						
2. Road Access to facility	Schedule Delay	V	D	3	1. road access for trucking loads has been confirmed. Permitted loads are identified (STFL equipment) and have been trucked to site previously	V	D	3			
3. Prepare for 24 hr operations	Damage to Equipment	IV	C	3	1. Core is a 24 ah operation	IV	E	3			
	Injury to Personnel	IV	C	3	2. Lighting will be provided	IV	E	3			
	Schedule Delay	IV	C	3		IV	E	3			
4. Security for facility base	Schedule Delay	III	C	2	1. Existing - ensure that security is established	III	E	3	1. BP Deconstruction activities - arrival notice.	Tim Redland	11/24/2010
					2. Personnel to have TWICE photo ID						

Project Name: MC 252 Deconstruction Project

Procedure Title: 1. Skandi Neptune Mobilization Procedure

General Activity: 1. Mobilization

Specific Activity: 1. Core Logistics Base General

Hazard / Environmental Aspect	Consequence - Hazard Effect / Environmental Impact	Risk Matrix			Existing/Planned Mitigation/Risk Reducing Measures	Residual Risk			Action	Action Party	Action Due Date
		S	P	RR		S	P	RR			
					3. Vessel will have gangway security						
5. Tidal rise and fall / Current patterns	Injury to personnel - use of gangway	III	C	2	1. Only slight tidal range @ Core Base	III	D	3			
	Damage to equipment.				2. Local knowledge of Core Base and conditions.						
	Damage to vessel.				3. Standard vessel operating procedures						
	Equipment Loss				4. Continuous watch on bridge / deck.						
	Mooring line failure				5. Competent personnel.						
	Damage to Quay				6. Appropriate selection of mobilisation / demobilisation port and berth.						
					7. Briefing of personnel to include vessel movements from tidal rise and fall prior to mobilisation / demobilisation.						
6. Insufficient draught for vessel at Quay side.	Damage to asset	II	D	2	1. Depth has been confirmed as sufficient.	II	E	3			
	Damage to Equipment - contamination through vessel intakes				2. Survey of berthing area completed						
	Schedule Delay				3. Local Pilot for entry of vessel						
7. Wash from other vessel movements in harbour. Adverse	Injury to personnel	III	D	3	1. Standard marine stand-by procedures	III	E	3			

Project Name: MC 252 Deconstruction Project

Procedure Title: 1. Skandi Neptune Mobilization Procedure

General Activity: 1. Mobilization

Specific Activity: 1. Core Logistics Base General

Hazard / Environmental Aspect	Consequence - Hazard Effect / Environmental Impact	Risk Matrix			Existing/Planned Mitigation/Risk Reducing Measures	Residual Risk			Action	Action Party	Action Due Date
		S	P	RR		S	P	RR			
weather	Damage to vessel - unexpected movement				2. Continuous watch on bridge.						
	Damage to equipment				3. Release of supply vessel (tied-up) if alongside.						
	Equipment Loss				4. Communications with harbour control for vessel movements.						
	Damage to asset				5. Co-ordination of crane / project operations with other vessel movements.						
					6. Suspension of operations during other vessel movements as required.						
					7. Hurricane Response Plan in place						
8. Handling of mooring ropes. Manual handling.	Injury to personnel - Pinch points. Slips, trips and falls	III	C	2	1. Experienced S7 and marine personnel.	III	D	3			
					2. Standard marine stand-by procedures.						
					3. Supervision.						
					4. Good manual handling techniques applied.						
					5. Good housekeeping						
					6. Barrier-off area around ropes.						

Project Name: MC 252 Deconstruction Project

Procedure Title: 1. Skandi Neptune Mobilization Procedure

General Activity: 1. Mobilization

Specific Activity: 1. Core Logistics Base General

Hazard / Environmental Aspect	Consequence - Hazard Effect / Environmental Impact	Risk Matrix			Existing/Planned Mitigation/Risk Reducing Measures	Residual Risk			Action	Action Party	Action Due Date
		S	P	RR		S	P	RR			
					7. Safe area identified on deck around mooring ropes that could come under tension due to thruster activity						
					8. Clear-deck alarm if there is a problem.						
					9. Green hard hat policy for personnel new to vessel and worn until deemed competent and familiar with vessel.						
					10. Task Risk Assessment.						
					11. Appropriate PPE - hand protection.						
9. Loading on bollards. Bollard failure. Mooring rope / wire failure	Schedule delay	I	D	2	1. Certified and inspected wire/rope	I	E	3			
	Damage to equipment.				2. Area clear of unauthorised personnel						
	Injury to personnel				3. Periodic monitoring of wire and ropes						
					4. Sufficiently rated bollards						
					5. Only essential personnel to be working on quay side						
					6. TWIC controlled area						
10. Rotating Equipment	Equipment damage	I	C	1	1. Adherence to procedures/checklists	I	E	3			
	Injury to Personnel				2. Adherence to Safe Working Practices						

Project Name: MC 252 Deconstruction Project

Procedure Title: 1. Skandi Neptune Mobilization Procedure

General Activity: 1. Mobilization

Specific Activity: 1. Core Logistics Base General

Hazard / Environmental Aspect	Consequence - Hazard Effect / Environmental Impact	Risk Matrix			Existing/Planned Mitigation/Risk Reducing Measures	Residual Risk			Action	Action Party	Action Due Date
		S	P	RR		S	P	RR			
					3. TBT						
					4. TRA						
					5. Trained and experienced operators / personnel						
					6. Personnel awareness and positioning						
					7. PPE						
					8. Area clear of unauthorised personnel - restricted access on mooring stations						
11. Ropes under tension	Equipment damage	I	C	1	1. Adherence to procedures/checklists	I	E	3			
	Injury to Personnel				2. Adherence to Safe Working Practices						
					3. TBT						
					4. TRA						
					5. Trained and experienced operators / personnel						
					6. Personnel awareness and positioning						
					7. PPE						
					8. Area clear of unauthorised personnel - restricted access on mooring stations						
12. Entrapment	Equipment damage	I	C	1	1. Adherence to procedures/checklists	I	E	3			

Project Name: MC 252 Deconstruction Project

Procedure Title: 1. Skandi Neptune Mobilization Procedure

General Activity: 1. Mobilization

Specific Activity: 1. Core Logistics Base General

Hazard / Environmental Aspect	Consequence - Hazard Effect / Environmental Impact	Risk Matrix			Existing/Planned Mitigation/Risk Reducing Measures	Residual Risk			Action	Action Party	Action Due Date
		S	P	RR		S	P	RR			
	Injury to Personnel				2. Adherence to Safe Working Practices						
					3. TBT						
					4. TRA						
					5. Trained and experienced operators / personnel						
					6. Personnel awareness and positioning						
					7. PPE						
					8. Area clear of unauthorised personnel - restricted access on bow						
13. Equipment Failure	Equipment damage	I	C	1	1. Adherence to procedures/checklists	I	E	3			
	Injury to Personnel				2. Adherence to Safe Working Practices						
					3. TBT						
					4. TRA						
					5. Trained and experienced operators / personnel						
					6. Personnel awareness and positioning						
					7. PPE						
14. Unloading of material/equipment from trucks -	Personnel Injury	II	C	2	1. Personnel awareness and positioning	II	E	3			

Project Name: MC 252 Deconstruction Project

Procedure Title: **1. Skandi Neptune Mobilization Procedure**

General Activity: **1. Mobilization**

Specific Activity: **1. Core Logistics Base General**

Hazard / Environmental Aspect	Consequence - Hazard Effect / Environmental Impact	Risk Matrix			Existing/Planned Mitigation/Risk Reducing Measures	Residual Risk			Action	Action Party	Action Due Date
		S	P	RR		S	P	RR			
slips, trips, falls					2. Check truck deck prior to climbing on truck to rig equipment						
					3. TRA						

Project Name: MC 252 Deconstruction Project

Procedure Title: **1. Skandi Neptune Mobilization Procedure**

General Activity: **1. Mobilization**

Specific Activity: **2. Quay side / Vessel Security**

Hazard / Environmental Aspect	Consequence - Hazard Effect / Environmental Impact	Risk Matrix			Existing/Planned Mitigation/Risk Reducing Measures	Residual Risk			Action	Action Party	Action Due Date
		S	P	RR		S	P	RR			
1. Insufficient vessel security at quay side	Injury to personnel	II	B	1	1. Shipboard security plan	II	E	3			
	Damage to vessel.				2. Strict adherence to ISPS code						
	Equipment Loss				3. Port authority						
	Schedule delay				4. Mobilisation fax - Inclusion of site specific requirements e.g. photographic identification for security check on boarding vessel						
	Stow-away's				5. Awareness of personnel						
					6. Vessel specific security cards for personnel.						

Project Name: MC 252 Deconstruction Project

Procedure Title: **1. Skandi Neptune Mobilization Procedure**

General Activity: **1. Mobilization**

Specific Activity: **2. Quay side / Vessel Security**

Hazard / Environmental Aspect	Consequence - Hazard Effect / Environmental Impact	Risk Matrix			Existing/Planned Mitigation/Risk Reducing Measures	Residual Risk			Action	Action Party	Action Due Date
		S	P	RR		S	P	RR			
					7. Member of crew/security positioned at vessel reception at all times						
					8. TWIC controlled area						
					9. Core Base Security Plan in place						
2. Alcohol / substance abuse	Injury to personnel	II	C	2	1. Adherence to Subsea 7 "Drug and Alcohol Abuse Policy", PO-GL-HR-002	II	E	3			
	Damage to equipment.				2. Random D&A testing as per Regional Policy						
	Damage to vessel.										
3. TWIC Requirements	Schedule Delay	II	C	2	1. Ensure regulations are followed	II	E	3			
	Cost impact				2. Vessel personnel without TWIC cards are escorted to vessel by person who has TWIC Card						

Project Name: MC 252 Deconstruction Project

Procedure Title: **1. Skandi Neptune Mobilization Procedure**

General Activity: **1. Mobilization**

Specific Activity: **3. Mobilization of RDS**

Hazard / Environmental Aspect	Consequence - Hazard Effect / Environmental Impact	Risk Matrix			Existing/Planned Mitigation/Risk Reducing Measures	Residual Risk			Action	Action Party	Action Due Date
		S	P	RR		S	P	RR			

Project Name: MC 252 Deconstruction Project

Procedure Title: 1. Skandi Neptune Mobilization Procedure

General Activity: 1. Mobilization

Specific Activity: 3. Mobilization of RDS

Hazard / Environmental Aspect	Consequence - Hazard Effect / Environmental Impact	Risk Matrix			Existing/Planned Mitigation/Risk Reducing Measures	Residual Risk			Action	Action Party	Action Due Date
		S	P	RR		S	P	RR			
1. Lifting operations. Lift equipment / rigging failure - dropped objects. Environmental conditions and vessel movement.	Injury to personnel	I	C	1	1. Adherence to Subsea 7 "Global Lift Planning Procedure", PR-GL-LIFT-001	I	E	3			
	Damage to asset				2. Certified, inspected and maintained lifting equipment and rigging						
	Damage to equipment				3. Good communications						
	Damage to vessel.				4. Activities controlled by Lift Foreman						
	Schedule delay				5. Deck and quay side restricted to essential personnel only						
					6. Use of tag lines to aid handling as required						
					7. Adequate back deck and quay side lighting						
					8. Shift briefings, shift handovers, and toolbox talks						
					9. Quay side controlled area						
					10. Approved deck plan						
					11. Continuous watch on bridge / deck.						
					12. Weather forecasting and monitoring						

Project Name: MC 252 Deconstruction Project

Procedure Title: 1. Skandi Neptune Mobilization Procedure

General Activity: 1. Mobilization

Specific Activity: 3. Mobilization of RDS

Hazard / Environmental Aspect	Consequence - Hazard Effect / Environmental Impact	Risk Matrix			Existing/Planned Mitigation/Risk Reducing Measures	Residual Risk			Action	Action Party	Action Due Date
		S	P	RR		S	P	RR			
					13. Crane appropriately sized to lift load at required radii						
					14. Pre-lift equipment checks						
					15. manifold/mud mat lifting to be FAT'd						
					16. Ballasting will be confirmed prior to lifting operation						
2. Unloading of material/equipment from trucks - slips, trips, falls	Personnel Injury	II	C	2	1. Personnel awareness and positioning	II	E	3			
					2. Check truck deck prior to climbing on truck to rig equipment						
					3. TRA						
3. Loss of communications	Injury to personnel	I	C	1	1. Secondary communication method identified during TBT and lift plan	I	E	3			
	Damage to asset				2. Communication checks prior to operations						
	Damage to equipment				3. Dedicated radio channels						
	Damage to vessel.				4. Spare radios and batteries						
	Schedule delay				5. Communications with harbour control for vessel movements.						

Project Name: MC 252 Deconstruction Project

Procedure Title: 1. Skandi Neptune Mobilization Procedure

General Activity: 1. Mobilization

Specific Activity: 3. Mobilization of RDS

Hazard / Environmental Aspect	Consequence - Hazard Effect / Environmental Impact	Risk Matrix			Existing/Planned Mitigation/Risk Reducing Measures	Residual Risk			Action	Action Party	Action Due Date
		S	P	RR		S	P	RR			
					6. All operations are to stop if all communications lost until they can be rectified.						
4. Dropped objects	Personnel injury	IV	C	3	1. Certified and inspected rigging.	IV	D	3			
	Damage to equipment				2. Awareness of personal and equipment positioning						
	Schedule Delay				3. Restricted work area - only essential personnel						
	Damage to asset				4. All lifts are check for loose items prior to lift and loose items removed						
					5. No work under suspended load						
5. Electrical equipment	Personnel injury	I	C	1	1. Certified, inspected and maintained equipment	I	E	3			
	Damage to equipment				2. Pre-use equipment checks						
	Schedule Delay				3. Adherence to procedure for operation of equipment						
					4. Awareness of personal and equipment positioning						
					5. Competent and trained personnel						
					6. Adherence to the PTW on barge/supply vessel						

Project Name: MC 252 Deconstruction Project

Procedure Title: 1. Skandi Neptune Mobilization Procedure

General Activity: 1. Mobilization

Specific Activity: 3. Mobilization of RDS

Hazard / Environmental Aspect	Consequence - Hazard Effect / Environmental Impact	Risk Matrix			Existing/Planned Mitigation/Risk Reducing Measures	Residual Risk			Action	Action Party	Action Due Date
		S	P	RR		S	P	RR			
					7. Pre-connection inspection by vessel senior electrician prior to connect of 3rd party equipment.						
6. Equipment failure - welding/burning equipment	Damage to asset	II	C	2	1. Certified, inspected and maintained equipment	II	E	3			
	Schedule Delay				2. Pre-use equipment checks						
	Damage to equipment				3. Use of whip checks on hoses						
	Personnel injury				4. Adherence to procedure for operation of equipment						
					5. Flash arrestors at each end of hose						
7. Gas leak / fires	Damage to asset	I	C	1	1. Certified, inspected and maintained equipment	I	E	3			
	Schedule Delay				2. Pre-use equipment checks						
	Damage to equipment				3. Adherence to procedure for operation of equipment						
	Personnel injury				4. Awareness of personal and equipment positioning						
					5. Competent and trained personnel						
					6. If relevant, gas free certification to be obtained when welding adjacent/over fuel tanks						

Project Name: MC 252 Deconstruction Project

Procedure Title: 1. Skandi Neptune Mobilization Procedure

General Activity: 1. Mobilization

Specific Activity: 3. Mobilization of RDS

Hazard / Environmental Aspect	Consequence - Hazard Effect / Environmental Impact	Risk Matrix			Existing/Planned Mitigation/Risk Reducing Measures	Residual Risk			Action	Action Party	Action Due Date
		S	P	RR		S	P	RR			
					7. Fire watch - with regular checks to ensure						
					8. Spark arrestors fitted to burning gear						
					9. Isolations if required						
					10. PTW						
					11. Fire extinguishers on site						
					12. Don't drag welding cables over any rigging equipment wires						
8. 3rd party welders unprepared	Injury to Personnel	II I	C	2	1. Existing HSEQ contract addendum.						
	Schedule Delay										
9. Personnel falling overboard	Injury to personnel	I	C	1	1. Use of PFD's as required	I	E	3			
	Schedule Delay				2. Awareness of personal and equipment positioning						
					3. vessel to have MOB procedures - MOB boat available as Seven Oceans will be port side to Quay						
					4. Handrails/barriers to be put in place if not already on vessel						
					5. gangway to have net						
					6. sufficient lighting						
					7. Life rings to be made available						

Project Name: MC 252 Deconstruction Project

Procedure Title: 1. Skandi Neptune Mobilization Procedure

General Activity: 1. Mobilization

Specific Activity: 3. Mobilization of RDS

Hazard / Environmental Aspect	Consequence - Hazard Effect / Environmental Impact	Risk Matrix			Existing/Planned Mitigation/Risk Reducing Measures	Residual Risk			Action	Action Party	Action Due Date
		S	P	RR		S	P	RR			
10. Insufficient survey of deck	Schedule Delay	III	C	2	1. Ensure surveyors familiar with operations/requirements	III	D	3			
					2. Survey during mobilisation						
					3. Ensure plenty of shim material available during mobilisation						
					4. Adhere to engineered drawings						
					5. Adherence to installation procedure - criteria / tolerances specified.						
					6. Use 3rd party surveyors that have been used previously.						
11. Use of power tools	Personnel injury	III	C	2	1. Certified, inspected and maintained equipment	III	E	3			
	Schedule Delay				2. Pre-use equipment checks						
					3. 3rd party to have adequate PPE - HSE addendum that specifies minimum PPE requirement						
					4. Adherence to procedure for operation of equipment						
					5. Awareness of personal and equipment positioning						
					6. GFCI						

Project Name: MC 252 Deconstruction Project

Procedure Title: **1. Skandi Neptune Mobilization Procedure**

General Activity: **1. Mobilization**

Specific Activity: **3. Mobilization of RDS**

Hazard / Environmental Aspect	Consequence - Hazard Effect / Environmental Impact	Risk Matrix			Existing/Planned Mitigation/Risk Reducing Measures	Residual Risk			Action	Action Party	Action Due Date
		S	P	RR		S	P	RR			
					7. Competent and trained personnel						

Project Name: MC 252 Deconstruction Project

Procedure Title: **1. Skandi Neptune Mobilization Procedure**

General Activity: **1. Mobilization**

Specific Activity: **4. Mobilization of Reels**

Hazard / Environmental Aspect	Consequence - Hazard Effect / Environmental Impact	Risk Matrix			Existing/Planned Mitigation/Risk Reducing Measures	Residual Risk			Action	Action Party	Action Due Date
		S	P	RR		S	P	RR			
1. Lifting operations. Lift equipment / rigging failure - dropped objects. Environmental conditions and vessel movement.	Damage to asset	I	C	1	1. Adherence to Subsea 7 "Global Lift Planning Procedure", PR-GL-LIFT-001	I	E	3			
	damage to equipment				2. Certified, inspected and maintained lifting equipment and rigging						
	Injury of Personnel				3. Good communications						
					4. Activities controlled by Lift Foreman						
					5. Deck and quay side restricted to essential personnel only						
					6. Use of tag lines to aid handling as required						

Project Name: MC 252 Deconstruction Project

Procedure Title: 1. Skandi Neptune Mobilization Procedure

General Activity: 1. Mobilization

Specific Activity: 4. Mobilization of Reels

Hazard / Environmental Aspect	Consequence - Hazard Effect / Environmental Impact	Risk Matrix			Existing/Planned Mitigation/Risk Reducing Measures	Residual Risk			Action	Action Party	Action Due Date
		S	P	RR		S	P	RR			
					7. Adequate back deck and quay side lighting						
					8. Shift briefings, shift handovers, and toolbox talks						
					9. Quay side controlled area						
					10. Approved deck plan						
					11. Continuous watch on bridge / deck.						
					12. Weather forecasting and monitoring						
					13. Crane appropriately sized to lift load at required radii						
					14. Pre-lift equipment checks						
					15. manifold/mud mat lifting to be FAT'd						
					16. Ballasting will be confirmed prior to lifting operation						
					17. Ensure reel is free from storage cradles						
					18. Ensure Spreader bar is located correctly - marked heavy side						

Project Name: MC 252 Deconstruction Project

Procedure Title: **1. Skandi Neptune Mobilization Procedure**

General Activity: **1. Mobilization**

Specific Activity: **4. Mobilization of Reels**

Hazard / Environmental Aspect	Consequence - Hazard Effect / Environmental Impact	Risk Matrix			Existing/Planned Mitigation/Risk Reducing Measures	Residual Risk			Action	Action Party	Action Due Date
		S	P	RR		S	P	RR			
					19. Measure reel and landing cradles prior to lift off.						

Project Name: MC 252 Deconstruction Project

Procedure Title: **1. Skandi Neptune Mobilization Procedure**

General Activity: **1. Mobilization**

Specific Activity: **5. Offloading of reels from barge**

Hazard / Environmental Aspect	Consequence - Hazard Effect / Environmental Impact	Risk Matrix			Existing/Planned Mitigation/Risk Reducing Measures	Residual Risk			Action	Action Party	Action Due Date
		S	P	RR		S	P	RR			
1. Communication between core base and storage barge	Injury to personnel				1. Banksman Core Base and Barge (Barge banksman and Core banksman)				2. Identify existing rescue plan for man overboard	Ronald Steinmeyer	11/15/2010
	Product damage	I	C	1	2. Rescue plan	I	D	2			
					3. Working overboard harness / life jackets						
					4. Adequate gangway to barge						
					5.						

Project Name: MC 252 Deconstruction Project

Procedure Title: 1. Skandi Neptune Mobilization Procedure

General Activity: 1. Mobilization

Specific Activity: 6. Lifting Operations

Hazard / Environmental Aspect	Consequence - Hazard Effect / Environmental Impact	Risk Matrix			Existing/Planned Mitigation/Risk Reducing Measures	Residual Risk			Action	Action Party	Action Due Date
		S	P	RR		S	P	RR			
1. Lifting operations. Lift equipment / rigging failure - dropped objects. Environmental conditions and vessel movement.	Injury to personnel	I	C	1	1. Adherence to Subsea 7 "Global Lift Planning Procedure", PR-GL-LIFT-001	I	E	3			
	Damage to asset - MOC				2. Certified, inspected and maintained lifting equipment and rigging						
	Damage to equipment				3. Competent personnel.						
	Damage to vessel.				4. Good communications						
	Schedule delay				5. Deck activities controlled by Construction Foreman						
					6. Deck and quay side restricted to essential personnel only						
					7. Use of tag lines to aid handling as required						
					8. Contingency equipment/rigging						
					9. Green hard hat policy for personnel new to vessel and worn until deemed competent and familiar with vessel.						
					10. Adequate back deck and quay side lighting						
					11. Shift briefings, shift handovers, and toolbox talks						
					12. Quay side controlled area						

Project Name: MC 252 Deconstruction Project

Procedure Title: **1. Skandi Neptune Mobilization Procedure**

General Activity: **1. Mobilization**

Specific Activity: **6. Lifting Operations**

Hazard / Environmental Aspect	Consequence - Hazard Effect / Environmental Impact	Risk Matrix			Existing/Planned Mitigation/Risk Reducing Measures	Residual Risk			Action	Action Party	Action Due Date
		S	P	RR		S	P	RR			
					13. Approved deck plan						
					14. Checklists						
					15. Suspension of operations during other vessel movements as required.						
					16. Continuous watch on bridge / deck.						
					17. Weather forecasting and monitoring						
					18. Vessel specific lifting TRA's						
					19. Appropriate PPE						
					20. Dedicated radio channels						

Project Name: MC 252 Deconstruction Project

Procedure Title: **1. Skandi Neptune Mobilization Procedure**

General Activity: **1. Mobilization**

Specific Activity: **7. Storage/handling of chemicals**

Hazard / Environmental Aspect	Consequence - Hazard Effect / Environmental Impact	Risk Matrix			Existing/Planned Mitigation/Risk Reducing Measures	Residual Risk			Action	Action Party	Action Due Date
		S	P	RR		S	P	RR			

Project Name: MC 252 Deconstruction Project

Procedure Title: 1. Skandi Neptune Mobilization Procedure

General Activity: 1. Mobilization

Specific Activity: 7. Storage/handling of chemicals

Hazard / Environmental Aspect	Consequence - Hazard Effect / Environmental Impact	Risk Matrix			Existing/Planned Mitigation/Risk Reducing Measures	Residual Risk			Action	Action Party	Action Due Date
		S	P	RR		S	P	RR			
1. Handling chemicals	Injury to personnel - burns	III	C	2	1. COSHH (HAZCOM) Assessment and MSDS to be made available on vessel and copy to be given to medic	III	D	3			
	Environmental impact				2. PPE as defined by COSHH/MSDS						
	Fire				3. Restricted work area - only essential personnel						
	Injury to personnel - long term health effects				4. Limited quantities of chemicals on work site						
					5. Correct storage and disposal of chemicals						
					6. Competent and trained personnel						
					7. Third party documentation will be provided and posted at work site						
					8. Good housekeeping						
					9. Toolbox talk						
					10. Lifting on FJC chemicals within containers						
					11. Task Risk Assessment.						
					12. Chemicals added Sypol database onboard vessel						
					13. Chemicals are clearly labeled						

Project Name: MC 252 Deconstruction Project

Procedure Title: 1. Skandi Neptune Mobilization Procedure

General Activity: 1. Mobilization

Specific Activity: 7. Storage/handling of chemicals

Hazard / Environmental Aspect	Consequence - Hazard Effect / Environmental Impact	Risk Matrix			Existing/Planned Mitigation/Risk Reducing Measures	Residual Risk			Action	Action Party	Action Due Date
		S	P	RR		S	P	RR			
					14. Eye wash stations/showers available onboard						
2. Storage of chemicals	Injury to personnel - burns	II I	C	2	1. COSHH (HAZCOM) Assessment and MSDS to be made available on vessel and copy to be given to medic	III	E	3			
	Environmental impact				2. Restricted work area - only essential personnel						
	Fire				3. Good housekeeping						
	Injury to personnel - long term health effects				4. Notify bridge of where chemicals are stored on deck						
					5. Specific areas identified for segregation of chemicals that are brought onboard						
					6. Chemicals are clearly labeled						
					7. Correct storage and disposal of chemicals						
					8. Chemicals added Sypol database onboard vessel						
					9. Eye wash stations/showers available onboard						

Project Name: MC 252 Deconstruction Project

Procedure Title: 1. Skandi Neptune Mobilization Procedure

General Activity: 1. Mobilization

Specific Activity: 8. Simultaneous Operations

Hazard / Environmental Aspect	Consequence - Hazard Effect / Environmental Impact	Risk Matrix			Existing/Planned Mitigation/Risk Reducing Measures	Residual Risk			Action	Action Party	Action Due Date
		S	P	RR		S	P	RR			
1. Interaction of quay side, deck, marine and third party activities	Injury to personnel	II	C	2	1. Deck activities controlled by Construction Foreman	II	E	3			
	Damage to equipment				2. Third party management and personnel are subject to a specific induction prior to commencing work						
	Equipment Loss				3. Project Briefings						
	Damage to vessel.				4. Quay side controlled area						
	Environmental impact				5. Supervision of contractors						
	Schedule delay				6. Mobilisation fax and procedure						
					7. Prioritisation of activities						
					8. Approved contractors						
					9. Approved deck plan						
					10. Vessel PTW system - Tannoy announcements / barriers / signage						
					11. Vessel induction						
					12. Visitors restricted to vessel accommodation unless accompanied as required						
					13. Only essential personnel on deck and quay side						
					14. Experienced S7 personnel.						

Project Name: MC 252 Deconstruction Project

Procedure Title: **1. Skandi Neptune Mobilization Procedure**

General Activity: **1. Mobilization**

Specific Activity: **8. Simultaneous Operations**

Hazard / Environmental Aspect	Consequence - Hazard Effect / Environmental Impact	Risk Matrix			Existing/Planned Mitigation/Risk Reducing Measures	Residual Risk			Action	Action Party	Action Due Date
		S	P	RR		S	P	RR			
					15. Competent third party						
					16. Good communications						
					17. Shift briefings, shift handovers, and toolbox talks						
					18. Task Risk Assessment.						

Project Name: MC 252 Deconstruction Project

Procedure Title: **1. Skandi Neptune Mobilization Procedure**

General Activity: **1. Mobilization**

Specific Activity: **9. Seafastenings**

Hazard / Environmental Aspect	Consequence - Hazard Effect / Environmental Impact	Risk Matrix			Existing/Planned Mitigation/Risk Reducing Measures	Residual Risk			Action	Action Party	Action Due Date
		S	P	RR		S	P	RR			
1. Inadequate seafastening.	Injury to personnel	II	C	2	1. Seafastenings and locations are planned in advance.	II	E	3			
	Damage to equipment				2. Seafastenings proven adequate by calculation. Subsea 7 structural group carry out calculations						
	Damage to vessel.				3. Approved deck plan.						
	Damage to asset				4. Deck plans provided in advance of mobilisation.						

Project Name: MC 252 Deconstruction Project

Procedure Title: **1. Skandi Neptune Mobilization Procedure**

General Activity: **1. Mobilization**

Specific Activity: **9. Seafastenings**

Hazard / Environmental Aspect	Consequence - Hazard Effect / Environmental Impact	Risk Matrix			Existing/Planned Mitigation/Risk Reducing Measures	Residual Risk			Action	Action Party	Action Due Date
		S	P	RR		S	P	RR			
	Schedule delay				5. Seafastening material certification available.						
	Environmental impact				6. Certified and inspected rigging.						
					7. NDT of welds is required.						
					8. Approved contractor.						
					9. Competent third party.						

Project Name: MC 252 Deconstruction Project

Procedure Title: **1. Skandi Neptune Mobilization Procedure**

General Activity: **1. Mobilization**

Specific Activity: **10. Health and Welfare**

Hazard / Environmental Aspect	Consequence - Hazard Effect / Environmental Impact	Risk Matrix			Existing/Planned Mitigation/Risk Reducing Measures	Residual Risk			Action	Action Party	Action Due Date
		S	P	RR		S	P	RR			
1. Dehydration / heatstroke	Illness of personnel	II	C	2	1. Potable water available onsite	II	E	3			
					2. Air conditioning present in accommodation.						
					3. Substitution of personnel for regular breaks						
					4. Electrolyte type drinks provided						
					5. Education through site induction						

Project Name: MC 252 Deconstruction Project

Procedure Title: **1. Skandi Neptune Mobilization Procedure**

General Activity: **1. Mobilization**

Specific Activity: **10. Health and Welfare**

Hazard / Environmental Aspect	Consequence - Hazard Effect / Environmental Impact	Risk Matrix			Existing/Planned Mitigation/Risk Reducing Measures	Residual Risk			Action	Action Party	Action Due Date
		S	P	RR		S	P	RR			
					6. Access to vessel medic						
2. Excessive working hours / fatigue	Injury to personnel	I	C	1	1. Substitution of personnel for regular breaks	I	E	3			
	Illness of personnel				2. Good supervision						
	Damage to pipe / coating				3. Site Task Risk Assessment						
	Damage to site				4. Toolbox Talk						
	Damage to equipment				5. Full 24 hrs coverage						
					6. Subsea 7 policy regarding working hours						

Project Name: MC 252 Deconstruction Project

Procedure Title: **1. Skandi Neptune Mobilization Procedure**

General Activity: **1. Mobilization**

Specific Activity: **11. Mob subcontractors**

Hazard / Environmental Aspect	Consequence - Hazard Effect / Environmental Impact	Risk Matrix			Existing/Planned Mitigation/Risk Reducing Measures	Residual Risk			Action	Action Party	Action Due Date
		S	P	RR		S	P	RR			
1. Unfamiliar subcontractors	Injury to Personnel	II I	C	2	1. Existing - Toolbox talks, PPE, pre-shift meetings,	III	E	3			

Project Name: MC 252 Deconstruction Project

Procedure Title: **1. Skandi Neptune Mobilization Procedure**

General Activity: **1. Mobilization**

Specific Activity: **11. Mob subcontractors**

Hazard / Environmental Aspect	Consequence - Hazard Effect / Environmental Impact	Risk Matrix			Existing/Planned Mitigation/Risk Reducing Measures	Residual Risk			Action	Action Party	Action Due Date
		S	P	RR		S	P	RR			
	Damage to Equipment	III	C	2	2. Planned - Ensure attendance of all parties at briefings & familiarization. S7 presence during scope. Involve in shift briefings during scope	III	E	3			
	Schedule Delay	III	C	2	3. Subsea 7 plan to use sub contractors with experience at core base	III	E	3			

Project Name: MC 252 Deconstruction Project

Procedure Title: **1. Skandi Neptune Mobilization Procedure**

General Activity: **1. Mobilization**

Specific Activity: **12. General Vessel Mobilization**

Hazard / Environmental Aspect	Consequence - Hazard Effect / Environmental Impact	Risk Matrix			Existing/Planned Mitigation/Risk Reducing Measures	Residual Risk			Action	Action Party	Action Due Date
		S	P	RR		S	P	RR			
1. Dropped object	Damage to Equipment	II	D	2	1. Existing - Follow and enforce S7 lift policy. Ensure use of proper PPE.	II	E	3			
	Injury to Personnel	II	D	2	2. Planned - Review equipment to be loaded out, incorporate suitable load test if applicable. Ensure FIM provided is clearly marked/rigged appropriately	II	E	3			

Project Name: MC 252 Deconstruction Project

Procedure Title: **1. Skandi Neptune Mobilization Procedure**

General Activity: **1. Mobilization**

Specific Activity: **12. General Vessel Mobilization**

Hazard / Environmental Aspect	Consequence - Hazard Effect / Environmental Impact	Risk Matrix			Existing/Planned Mitigation/Risk Reducing Measures	Residual Risk			Action	Action Party	Action Due Date
		S	P	RR		S	P	RR			
					3. All rigging to be provided with rigging with valid cert						
2. Subcontractors not coming prepared with full PPE	Injury to Personnel	IV	A	2	1. experienced subcontractors are in normally in compliance with S7 procedures	IV	C	3			
	Schedule Delay	IV	A	2	2. Subsea 7 will have additional PPE if required	IV	C	3			
3. General Mob activities (lifting , handling, deck movements, SIMOPS, heat etc)	Injury to Personnel	IV	A	2	1. Subsea 7 policy's to be followed at all times	IV	C	3			
	Schedule Delay	IV	A	2	2. Subsea 7 mob to be run through the bridge supervisor with secondary supervisor from all the leads (Deck, VLS, Project Eng, Logistic super)	IV	C	3			
					3. TRA and TBTs to be completed						
					4. Fluids to be available						

Project Name: MC 252 Deconstruction Project

Procedure Title: **1. Skandi Neptune Mobilization Procedure**

General Activity: **1. Mobilization**

Specific Activity: **13. Welding during mobilization**

Hazard / Environmental Aspect	Consequence - Hazard Effect / Environmental Impact	Risk Matrix			Existing/Planned Mitigation/Risk Reducing Measures	Residual Risk			Action	Action Party	Action Due Date
		S	P	RR		S	P	RR			

Project Name: MC 252 Deconstruction Project

Procedure Title: **1. Skandi Neptune Mobilization Procedure**

General Activity: **1. Mobilization**

Specific Activity: **13. Welding during mobilization**

Hazard / Environmental Aspect	Consequence - Hazard Effect / Environmental Impact	Risk Matrix			Existing/Planned Mitigation/Risk Reducing Measures	Residual Risk			Action	Action Party	Action Due Date
		S	P	RR		S	P	RR			
1. Welding in "No Weld Zones"	Damage to Equipment	II	C	2	1. Brief personnel and subcontractors	II	E	3			
	Injury to Personnel	II	C	2	2. PTW process to be in place and followed	II	E	3			
	Schedule Delay	II	C	2	3. Provide a trained fire watch	II	E	3			

Project Name: MC 252 Deconstruction Project

Procedure Title: **1. Skandi Neptune Mobilization Procedure**

General Activity: **2. Demobilization**

Specific Activity: **1. Offloading Reels w/ Crane Barge**

Hazard / Environmental Aspect	Consequence - Hazard Effect / Environmental Impact	Risk Matrix			Existing/Planned Mitigation/Risk Reducing Measures	Residual Risk			Action	Action Party	Action Due Date
		S	P	RR		S	P	RR			
1. Use of Crane Barge / Channel Traffic	Schedule Delay				1. Notice of operation	I	E	3	3. Ensure Harbour master is involved.	Stian Samuelsen	11/24/2010
	Damage to equipment / product	I	C	1	2. Communication				4. Awareness of marine traffic prior to lifting	John Seldon	11/26/2010
	Injury to personnel				3. Harbour master to be involved				5. Daytime Operation	John Seldon	11/26/2010
2. Attach lift rigging / reel to crane hook - Swinging block / Pinch Points /	Injury to personnel				1. Taglines						
	Damage to equipment	I	C	1	2. Competent personnel	I	E	3			
					3. Rigging arrangment						
					4. Correct tools						

Project Name: MC 252 Deconstruction Project

Procedure Title: 1. Skandi Neptune Mobilization Procedure

General Activity: 2. Demobilization

Specific Activity: 1. Offloading Reels w/ Crane Barge

Hazard / Environmental Aspect	Consequence - Hazard Effect / Environmental Impact	Risk Matrix			Existing/Planned Mitigation/Risk Reducing Measures	Residual Risk			Action	Action Party	Action Due Date
		S	P	RR		S	P	RR			
					5. Avoid working at height						
					6. Painted stripe on spreader						
					7. designate offset of COG						
					8. Consider use of tuggers						
3. Lifting reel of vessel - Swinging load / rigging failure / vessel movements	injury to personnel				1. Certified rigging (Visually inspected as well)						
	Damage to equipment / product	I	C	1	2. Vessel riggers to ensure no loose items	I	E	3			
					3. Slow increments when taking up load						
					4. Ballasting (Communication)						
					5. Ensure cradles are properly secured to reels if lifted						
4. Landing of reels on quayside - heavy load / soil capacities	Injury to personnel				1. Use of mattresses to spread out load if required						
	Damage to product / equipment	I	C	1	2. Consider short term storage versus long term	I	E	3			
					3. Detailed drawings						
					4. Land reels minimum 50ft away from the quayside as detailed on drawing						
5. Lift reels in tandem on quayside - uneven load / crane boom clash / overload of crane /	Injury to personnel				1. Drawing of crane set up						
	Damage to Equipment / product	I	C	1	2. Tandem lift performed with the two cranes before	I	E	3			

Project Name: MC 252 Deconstruction Project

Procedure Title: **1. Skandi Neptune Mobilization Procedure**

General Activity: **2. Demobilization**

Specific Activity: **1. Offloading Reels w/ Crane Barge**

Hazard / Environmental Aspect	Consequence - Hazard Effect / Environmental Impact	Risk Matrix			Existing/Planned Mitigation/Risk Reducing Measures	Residual Risk			Action	Action Party	Action Due Date
		S	P	RR		S	P	RR			
					3. decide on boom angle						
					4. slowly lift off and monitor load						
					5. Move cranes in a straight line from short term to long term storage area.						
6.											
7. Communication between core base and storage barge	Injury to personnel				1. Banksman Core Base and Barge (Barge banksman and Core banksman)				2. Identify existing rescue plan for man overboard	Ronald Steinmeyer	11/15/2010
	Product damage	I	C	1	2. Rescue plan	I	D	2			
					3. Working overboard harness / life jackets						
					4. Adequate gangway to barge						

Project Name: MC 252 Deconstruction Project

Procedure Title: **2. VLS setup (Tensioner Pad Replacement and Test Piece Operations)**

General Activity: **1. Tensioner Pad Replacement and Test Piece Operations**

Specific Activity: **1. Tensioner Pad Replacement**

Hazard / Environmental Aspect	Consequence - Hazard Effect / Environmental Impact	Risk Matrix			Existing/Planned Mitigation/Risk Reducing Measures	Residual Risk			Action	Action Party	Action Due Date
		S	P	RR		S	P	RR			

Project Name: MC 252 Deconstruction Project

Procedure Title: **2. VLS setup (Tensioner Pad Replacement and Test Piece Operations)**

General Activity: **1. Tensioner Pad Replacement and Test Piece Operations**

Specific Activity: **1. Tensioner Pad Replacement**

Hazard / Environmental Aspect	Consequence - Hazard Effect / Environmental Impact	Risk Matrix			Existing/Planned Mitigation/Risk Reducing Measures	Residual Risk			Action	Action Party	Action Due Date
		S	P	RR		S	P	RR			
1. Working at heights	Injury of Personnel	III	C	2	1. Follow S7 SOP for working at heights	III	D	3			
2. PADS not suitable for use	damage to equipment	IV	C	3	1. Subsea 7 VLS techs inspect pads prior to every use as part of standard operating procedure	IV	C	3			
3. Dropped object from tensioners	Damage to equipment	III	C	2	1. Barrier off moonpool area, only qualified personnel to be present in work area.	III	E	3			
	Injury of Personnel	III	C	2		III	E	3			
4. Open moonpool area	Injury of Personnel	IV	B	2	1. Ensure moonpool area is barrier off. Ensure use of proper PPE, i.e. fall arrestors, life vest. Restrict test area to qualified personnel.	IV	D	3			

Project Name: MC 252 Deconstruction Project

Procedure Title: **3. Recovery of Flexible Jumpers**

General Activity: **1. Recovery of Seafloor Jumpers**

Specific Activity: **1. Survey**

Hazard / Environmental Aspect	Consequence - Hazard Effect / Environmental Impact	Risk Matrix			Existing/Planned Mitigation/Risk Reducing Measures	Residual Risk			Action	Action Party	Action Due Date
		S	P	RR		S	P	RR			
1. Inadequate survey	Damage to product during recover	I	C	1	1. Survey whole lengths of product prior to recovery	IV	E	3			

Project Name: MC 252 Deconstruction Project

Procedure Title: **3. Recovery of Flexible Jumpers**

General Activity: **1. Recovery of Seafloor Jumpers**

Specific Activity: **1. Survey**

Hazard / Environmental Aspect	Consequence - Hazard Effect / Environmental Impact	Risk Matrix			Existing/Planned Mitigation/Risk Reducing Measures	Residual Risk			Action	Action Party	Action Due Date
		S	P	RR		S	P	RR			
	Damage to adjacent structures				2. identify adjacent products						
					3. Include on navscreen						
					4. As built info provided by Client						
2.											

Project Name: MC 252 Deconstruction Project

Procedure Title: **3. Recovery of Flexible Jumpers**

General Activity: **1. Recovery of Seafloor Jumpers**

Specific Activity: **2. Attach Rigging and Recover first end**

Hazard / Environmental Aspect	Consequence - Hazard Effect / Environmental Impact	Risk Matrix			Existing/Planned Mitigation/Risk Reducing Measures	Residual Risk			Action	Action Party	Action Due Date
		S	P	RR		S	P	RR			
1. Start lift product of the seabed	Overstress Product	II	C	2	1. DMA attached to end	II	E	3			
	Sliding of End termination				2. Survey						
	Exceeding MBR (product damage)				3. Follow Lay Table						
					4. Certified Rigging						
					5. DP Trials						
					6. Monitor with ROV						
2. Recover Product to Hang off Frame	Dropped object	I	C	1	1. Recover Product in Safe Overboarding zone	I	E	3			

Project Name: MC 252 Deconstruction Project

Procedure Title: **3. Recovery of Flexible Jumpers**

General Activity: **1. Recovery of Seafloor Jumpers**

Specific Activity: **2. Attach Rigging and Recover first end**

Hazard / Environmental Aspect	Consequence - Hazard Effect / Environmental Impact	Risk Matrix			Existing/Planned Mitigation/Risk Reducing Measures	Residual Risk			Action	Action Party	Action Due Date
		S	P	RR		S	P	RR			
	Damage to Assets				2. Visually confirm rigging is properly attached by means of ROV						
					3. Ensure good integrity of end connectors and DMA						
3. DMA not properly attached to end of flexible / product sliding	Damage to product	I	C	1	1. ROV to confirm good connection	I	E	3			
	Damage to Assets				2. ROV to monitor						
4. ROV unable to attach rigging / locate grommet subsea	Schedule Delay	II	C	2	1. ROV friendly rigging	I	E	3			
					2. As built data						
					3. Buoyancy attached to rigging						
					4. ROV tooling to locate grommet (water jet / sheperds hook)						

Project Name: MC 252 Deconstruction Project

Procedure Title: **3. Recovery of Flexible Jumpers**

General Activity: **1. Recovery of Seafloor Jumpers**

Specific Activity: **3. Remove BR's**

Hazard / Environmental Aspect	Consequence - Hazard Effect / Environmental Impact	Risk Matrix			Existing/Planned Mitigation/Risk Reducing Measures	Residual Risk			Action	Action Party	Action Due Date
		S	P	RR		S	P	RR			
1. Removing bend restrictors in	Injury to personnel	I	C	1	1. Use of proper tooling	I	E	3	16. incude in procedure to	Jeff Ward	11/12/2010

Project Name: MC 252 Deconstruction Project

Procedure Title: **3. Recovery of Flexible Jumpers**

General Activity: **1. Recovery of Seafloor Jumpers**

Specific Activity: **3. Remove BR's**

Hazard / Environmental Aspect	Consequence - Hazard Effect / Environmental Impact	Risk Matrix			Existing/Planned Mitigation/Risk Reducing Measures	Residual Risk			Action	Action Party	Action Due Date
		S	P	RR		S	P	RR			
hang off frame	Damage to equipment				2. cover hang-off slot with protective material				cover hang-off frame with protective material		
	Manual handling				3. hold jumper in place with local rigging						
					4. Secure load from swinging						
					5. Use of proper PPE						
					6. No work under suspended load						
					7. correct manual mandling						
					8. identify process for removing from hang off frame						
2.											

Project Name: MC 252 Deconstruction Project

Procedure Title: **3. Recovery of Flexible Jumpers**

General Activity: **1. Recovery of Seafloor Jumpers**

Specific Activity: **4. Hang off 1st end in HOF**

Hazard / Environmental Aspect	Consequence - Hazard Effect / Environmental Impact	Risk Matrix			Existing/Planned Mitigation/Risk Reducing Measures	Residual Risk			Action	Action Party	Action Due Date
		S	P	RR		S	P	RR			
1. Secure load in hang off frame / swinging load	Secure product with chain pulls and local rigging	III	C	2	1. Protect hang off frame edges while attaching rigging	III	E	3			

Project Name: MC 252 Deconstruction Project

Procedure Title: **3. Recovery of Flexible Jumpers**

General Activity: **1. Recovery of Seafloor Jumpers**

Specific Activity: **4. Hang off 1st end in HOF**

Hazard / Environmental Aspect	Consequence - Hazard Effect / Environmental Impact	Risk Matrix			Existing/Planned Mitigation/Risk Reducing Measures	Residual Risk			Action	Action Party	Action Due Date
		S	P	RR		S	P	RR			
2. Attach Hang off Clamp / Dropped Object / Heavy	Injury of Personnel	I	C	1	1. fix one section of clamp to avoid manual handling of heavy clamp	I	E	3			
	Damage to asset				2. consider hinged 2nd clamp section						
					3. ensure no too tight tolerances for fitting clamp						
					4. Use of crane as required if any lifting						
3. 1st end recovery to surface / pressure relase when removing gooseneck	Injury of Personnel	I	C	1	1. flexible vented to ambient	I	E	3			

Project Name: MC 252 Deconstruction Project

Procedure Title: **3. Recovery of Flexible Jumpers**

General Activity: **1. Recovery of Seafloor Jumpers**

Specific Activity: **5. Goose Neck Removal**

Hazard / Environmental Aspect	Consequence - Hazard Effect / Environmental Impact	Risk Matrix			Existing/Planned Mitigation/Risk Reducing Measures	Residual Risk			Action	Action Party	Action Due Date
		S	P	RR		S	P	RR			
1. Working at height for attaching rigging to crane	Injury to personnel	I	C	1	1. Ensure rigging is preattached subsea for access on deck level	IV	D	3	17. confirm when to install lift rigging for gooseneck removal	Jeff Ward	11/12/2010
					2. No working at height						

Project Name: MC 252 Deconstruction Project

Procedure Title: **3. Recovery of Flexible Jumpers**

General Activity: **1. Recovery of Seafloor Jumpers**

Specific Activity: **5. Goose Neck Removal**

Hazard / Environmental Aspect	Consequence - Hazard Effect / Environmental Impact	Risk Matrix			Existing/Planned Mitigation/Risk Reducing Measures	Residual Risk			Action	Action Party	Action Due Date
		S	P	RR		S	P	RR			
2. Weather	Damage to equipment	IV	C	3	1. Analysis has defined a weather criteria for a acceptable installation window.	IV	D	3			
					2. Deck forman to consider deck motions						
3. Swinging load / Dropped object	Schedule delay	II	D	2	1. Use of taglines	III	E	3			
	Injury of Personnel				2. check gooseneck razorbacks - loose bolts						
	damage to equipment				3. Barrier of area						
					4. clear load path						
4. Unable to remove flanges	Schedule delay	I	D	2	1. Ensure correct bolt tensioning equipment is available	I	E	3			

Project Name: MC 252 Deconstruction Project

Procedure Title: **3. Recovery of Flexible Jumpers**

General Activity: **1. Recovery of Seafloor Jumpers**

Specific Activity: **6. Install Pull Head / Handling Head**

Hazard / Environmental Aspect	Consequence - Hazard Effect / Environmental Impact	Risk Matrix			Existing/Planned Mitigation/Risk Reducing Measures	Residual Risk			Action	Action Party	Action Due Date
		S	P	RR		S	P	RR			
1. Inadequate Pull-head / handling head installation	Damage to equipment	I	C	1	1. Follow bolt tensioning procedure and equipment	I	E	3	18. place hold point in procedure for vented pull	Jeff Ward	11/12/2010

Project Name: MC 252 Deconstruction Project

Procedure Title: **3. Recovery of Flexible Jumpers**

General Activity: **1. Recovery of Seafloor Jumpers**

Specific Activity: **6. Install Pull Head / Handling Head**

Hazard / Environmental Aspect	Consequence - Hazard Effect / Environmental Impact	Risk Matrix			Existing/Planned Mitigation/Risk Reducing Measures	Residual Risk			Action	Action Party	Action Due Date
		S	P	RR		S	P	RR			
	Injury of Personnel				2. Use new bolts, and check gaskets and flanges				head		
	schedule delay				3. Certified pull head						
					4. ensure pull-head is vented						

Project Name: MC 252 Deconstruction Project

Procedure Title: **3. Recovery of Flexible Jumpers**

General Activity: **1. Recovery of Seafloor Jumpers**

Specific Activity: **7. Transfer 1st end over VLS**

Hazard / Environmental Aspect	Consequence - Hazard Effect / Environmental Impact	Risk Matrix			Existing/Planned Mitigation/Risk Reducing Measures	Residual Risk			Action	Action Party	Action Due Date
		S	P	RR		S	P	RR			
1. Handling through the VLS / Overstressing product / dropped object	Schedule / Damage				1. Use of VLS winches	I	E	3			
	Injury of Personnel	I	C	1	2. Competent personnel						
					3. Good communication						
					4.						
2. Tensioner failure	Schedule Delay / Damage	I	C	1	1. Two tensioners	I	E	3			
					2. Maintenance program						
					3. Analysis						
3. Debris on product	Damage to equipment	II	C	2	1. Clean product as required (Pressure washer avialable)	I	E	3			

Project Name: MC 252 Deconstruction Project

Procedure Title: **3. Recovery of Flexible Jumpers**

General Activity: **1. Recovery of Seafloor Jumpers**

Specific Activity: **7. Transfer 1st end over VLS**

Hazard / Environmental Aspect	Consequence - Hazard Effect / Environmental Impact	Risk Matrix			Existing/Planned Mitigation/Risk Reducing Measures	Residual Risk			Action	Action Party	Action Due Date
		S	P	RR		S	P	RR			
					2. Awareness while paying in on the tensioners (Observe product when coming into the VLS)						

Project Name: MC 252 Deconstruction Project

Procedure Title: **3. Recovery of Flexible Jumpers**

General Activity: **1. Recovery of Seafloor Jumpers**

Specific Activity: **8. Secure 1st end to Reel and start spooling**

Hazard / Environmental Aspect	Consequence - Hazard Effect / Environmental Impact	Risk Matrix			Existing/Planned Mitigation/Risk Reducing Measures	Residual Risk			Action	Action Party	Action Due Date
		S	P	RR		S	P	RR			
1. Dropped Object	Use of correct rigging	IV	D	3	1. Analysis has been conducted to determine the correct water depth to deploy the umbilical to prior to recovery. This allows amble umbilical to be below the SUTA and provide counter weight	IV	E	3			
	No personnel under suspended load				2. Subsea 7 to design rigging to suit the moments-chain fall added to rigging						
2. Reel capacity	Damage to product	II	D	2	1. packing analysis	II	E	3			
	schedule delay				2. best practize packing						
					3. Certified rigging fit for purpose						

Project Name: MC 252 Deconstruction Project

Procedure Title: **3. Recovery of Flexible Jumpers**

General Activity: **1. Recovery of Seafloor Jumpers**

Specific Activity: **8. Secure 1st end to Reel and start spooling**

Hazard / Environmental Aspect	Consequence - Hazard Effect / Environmental Impact	Risk Matrix			Existing/Planned Mitigation/Risk Reducing Measures	Residual Risk			Action	Action Party	Action Due Date
		S	P	RR		S	P	RR			
3. Working at height	Injury of Personnel	I	C	1	1. Working at height procedures	I	E	3			
					2. Avoid if possible						
					3. PPE						
					4. Competent personnel.						

Project Name: MC 252 Deconstruction Project

Procedure Title: **3. Recovery of Flexible Jumpers**

General Activity: **1. Recovery of Seafloor Jumpers**

Specific Activity: **9. Disconnect and Recover DMA (Chain)**

Hazard / Environmental Aspect	Consequence - Hazard Effect / Environmental Impact	Risk Matrix			Existing/Planned Mitigation/Risk Reducing Measures	Residual Risk			Action	Action Party	Action Due Date
		S	P	RR		S	P	RR			
1. Dropped object	Damage to Assets	I	C	1	1. Recovery in safe zone	I	E	3	19. include ROV inspection of DMA before recovery in procedure	Jeff Ward	11/12/2010
	Injury of Personnel				2. Ensure crane capacity and lifting height is okay						
					3. Dedicated landing area away from equipment						
					4. barrier of area on deck						

Project Name: MC 252 Deconstruction Project

Procedure Title: **3. Recovery of Flexible Jumpers**

General Activity: **1. Recovery of Seafloor Jumpers**

Specific Activity: **10. Hang of 2nd end**

Hazard / Environmental Aspect	Consequence - Hazard Effect / Environmental Impact	Risk Matrix			Existing/Planned Mitigation/Risk Reducing Measures	Residual Risk			Action	Action Party	Action Due Date
		S	P	RR		S	P	RR			
1. Overstress product	Damage to Assets	I	C	1	1. Follow lay table 2. Weather 3. Procedure	I	E	3	20. determine recovery speed for pull heads that are used	Tim Caws	11/12/2010

Project Name: MC 252 Deconstruction Project

Procedure Title: **3. Recovery of Flexible Jumpers**

General Activity: **1. Recovery of Seafloor Jumpers**

Specific Activity: **11. Transfer 2nd end over VLS**

Hazard / Environmental Aspect	Consequence - Hazard Effect / Environmental Impact	Risk Matrix			Existing/Planned Mitigation/Risk Reducing Measures	Residual Risk			Action	Action Party	Action Due Date
		S	P	RR		S	P	RR			
1. Dropped object	See 3.1.7										

Project Name: MC 252 Deconstruction Project

Procedure Title: **3. Recovery of Flexible Jumpers**

General Activity: **1. Recovery of Seafloor Jumpers**

Specific Activity: **12. Secure 2nd end to reel**

Hazard / Environmental Aspect	Consequence - Hazard Effect / Environmental Impact	Risk Matrix			Existing/Planned Mitigation/Risk Reducing Measures	Residual Risk			Action	Action Party	Action Due Date
		S	P	RR		S	P	RR			
1. Dropped Object	See 3.1.8										

Project Name: MC 252 Deconstruction Project

Procedure Title: **3. Recovery of Flexible Jumpers**

General Activity: **1. Recovery of Seafloor Jumpers**

Specific Activity: **12. Secure 2nd end to reel**

Hazard / Environmental Aspect	Consequence - Hazard Effect / Environmental Impact	Risk Matrix			Existing/Planned Mitigation/Risk Reducing Measures	Residual Risk			Action	Action Party	Action Due Date
		S	P	RR		S	P	RR			
2. Working at height	See 3.1.8										

Project Name: MC 252 Deconstruction Project

Procedure Title: **3. Recovery of Flexible Jumpers**

General Activity: **1. Recovery of Seafloor Jumpers**

Specific Activity: **13. Secure BS Assemly in VLS**

Hazard / Environmental Aspect	Consequence - Hazard Effect / Environmental Impact	Risk Matrix			Existing/Planned Mitigation/Risk Reducing Measures	Residual Risk			Action	Action Party	Action Due Date
		S	P	RR		S	P	RR			
1. hold back of BS in tensioner during flexible recovery	Damage to equipment	III	C	2	1. Use rated hold back points	IV	E	3	21. confirm hold back points on bend stiffener	Gordon Reitze	11/12/2010
	Injury of Personnel				2. Hold back in both directions						
2. Unprotected BS during handling	Damage to equipment	IV	C	3	1. Provide protection to bend stiffener as required	IV	E	3			
3. Potential damage to BS or other component parts by sharp edges on installation. equip.	Damage to equipment	IV	D	3	1. Project team to procure "VLS" shackles and provide qty of neoprene for general handling.	IV	D	3			
					2. Provide bend stiffener jacket or similar (neoprene).						

Project Name: MC 252 Deconstruction Project

Procedure Title: **3. Recovery of Flexible Jumpers**

General Activity: **1. Recovery of Seafloor Jumpers**

Specific Activity: **14. Transfer BS over VLS (2nd end)**

Hazard / Environmental Aspect	Consequence - Hazard Effect / Environmental Impact	Risk Matrix			Existing/Planned Mitigation/Risk Reducing Measures	Residual Risk			Action	Action Party	Action Due Date
		S	P	RR		S	P	RR			
1. Dropped Object											
2. Swinging Load	Dropped object				1. Use of taglines						
	Injury to personnel	I	C	1	2. Use of VLS winches	I	E	3			
					3. Approved procedures						
					4. Crane curves reviewed						
					5. Use of correct rigging						
					6. No personnel under suspended load						
					7. Weather						

Project Name: MC 252 Deconstruction Project

Procedure Title: **3. Recovery of Flexible Jumpers**

General Activity: **1. Recovery of Seafloor Jumpers**

Specific Activity: **15. Remove BM**

Hazard / Environmental Aspect	Consequence - Hazard Effect / Environmental Impact	Risk Matrix			Existing/Planned Mitigation/Risk Reducing Measures	Residual Risk			Action	Action Party	Action Due Date
		S	P	RR		S	P	RR			
1. BM Condition	Injury of Personnel	I	C	1	1. Correct tooling	I	E	3			
	Damage to asset				2. Use of davits as required (weight)						
	Dropped objects				3. Proper storage and handling						

Project Name: MC 252 Deconstruction Project

Procedure Title: **3. Recovery of Flexible Jumpers**

General Activity: **1. Recovery of Seafloor Jumpers**

Specific Activity: **16. Remove Friction Clamp**

Hazard / Environmental Aspect	Consequence - Hazard Effect / Environmental Impact	Risk Matrix			Existing/Planned Mitigation/Risk Reducing Measures	Residual Risk			Action	Action Party	Action Due Date
		S	P	RR		S	P	RR			
1. Dropped Object	Injury of Personnel	I	C	1	1. Use of davits	I	E	3			
	Damage to asset				2. Correct tooling						
					3. Follow Procedures						

Project Name: MC 252 Deconstruction Project

Procedure Title: **3. Recovery of Flexible Jumpers**

General Activity: **1. Recovery of Seafloor Jumpers**

Specific Activity: **17. Secure Bend stiffener to 2nd end**

Hazard / Environmental Aspect	Consequence - Hazard Effect / Environmental Impact	Risk Matrix			Existing/Planned Mitigation/Risk Reducing Measures	Residual Risk			Action	Action Party	Action Due Date
		S	P	RR		S	P	RR			
1. Securing stiffener to 2nd end	Damage to asset	II I	C	2	1. bend stiffener properly secured to jumper	III	D	3			
	Personnel injury				2. protection in place						

Project Name: MC 252 Deconstruction Project

Procedure Title: **3. Recovery of Flexible Jumpers**

General Activity: **1. Recovery of Seafloor Jumpers**

Specific Activity: **18. recovery jumper through bend stiffener**

Hazard / Environmental Aspect	Consequence - Hazard Effect / Environmental Impact	Risk Matrix			Existing/Planned Mitigation/Risk Reducing Measures	Residual Risk			Action	Action Party	Action Due Date
		S	P	RR		S	P	RR			
1. Jumper hanging up on bend stiffener	Damage to asset	IV	D	3	1. monitor jumper while recovering through bend stiffener	IV	E	3	22. include in procedure to constantly monitor jumper while being recovered	Jeff Ward	11/12/2010
					2. sufficient tolerances in place						
					3. jumper will be washed before recovering through bend stiffener						

Project Name: MC 252 Deconstruction Project

Procedure Title: **3. Recovery of Flexible Jumpers**

General Activity: **2. Recovery of Surface Jumpers**

Specific Activity: **1. Survey**

Hazard / Environmental Aspect	Consequence - Hazard Effect / Environmental Impact	Risk Matrix			Existing/Planned Mitigation/Risk Reducing Measures	Residual Risk			Action	Action Party	Action Due Date
		S	P	RR		S	P	RR			
1. Inadequate survey	Damage to product during recover	I	C	1	1. Survey whole lengths of product prior to recovery	I	E	3			
	Damage to adjacent structures				2. identify adjacent products						
					3. Include on navscreen						
					4. As built info provided by Client (if existing)						

Project Name: MC 252 Deconstruction Project

Procedure Title: **3. Recovery of Flexible Jumpers**

General Activity: **2. Recovery of Surface Jumpers**

Specific Activity: **2. Recover 1st end to surface**

Hazard / Environmental Aspect	Consequence - Hazard Effect / Environmental Impact	Risk Matrix			Existing/Planned Mitigation/Risk Reducing Measures	Residual Risk			Action	Action Party	Action Due Date
		S	P	RR		S	P	RR			
1. Start lift product of the seabed	Overstress Product	II	C	2	1. DMA attached to end	II	E	3			
	Sliding of End termination				2. Survey and check rigging integrity on 1st end						
	Exceeding MBR (product damage)				3. Follow Lay Table						
					4. Certified Rigging						
					5. DP Trials						
					6. Monitor with ROV						
2. Recover Product to Work Station	Dropped object	I	C	1	1. Visually confirm rigging is properly attached by means of ROV	I	E	3	6. Ensure backup pressure washer is available	Maria Szczepaniak	11/15/2010
	Damage to Assets				2. Ensure good integrity of end connectors and DMA						
					3. Pressure washer in work station						
					4. Extra PPE - rainware, visor, rubber boots with steel toes, all sizes						
3. DMA not properly attached to end of flexible / product sliding	Damage to product	I	C	1	1. ROV to confirm good connection	I	E	3			
	Damage to Assets				2. ROV to monitor						
4. ROV unable to attach rigging / locate grommet subsea	Schedule Delay	II	C	2	1. ROV friendly rigging	I	E	3			
					2. As built data						
					3. Buoyancy attached to rigging						
					4. ROV tooling to locate grommet (water jet / sheperds hook)						

Project Name: MC 252 Deconstruction Project

Procedure Title: **3. Recovery of Flexible Jumpers**

General Activity: **2. Recovery of Surface Jumpers**

Specific Activity: **3. Remove BR's**

Hazard / Environmental Aspect	Consequence - Hazard Effect / Environmental Impact	Risk Matrix			Existing/Planned Mitigation/Risk Reducing Measures	Residual Risk			Action	Action Party	Action Due Date
		S	P	RR		S	P	RR			
1. ROV BR's	schedule delay				1. Use of proper tooling						
	Injury to personnel	I	C	1	2. Weight to be addressed in the procedure	I	E	3			
					3. Secure load from swinging						
					4. Use of proper PPE						
					5. No work under suspended load						

Project Name: MC 252 Deconstruction Project

Procedure Title: **3. Recovery of Flexible Jumpers**

General Activity: **2. Recovery of Surface Jumpers**

Specific Activity: **4. Remove Uraduct**

Hazard / Environmental Aspect	Consequence - Hazard Effect / Environmental Impact	Risk Matrix			Existing/Planned Mitigation/Risk Reducing Measures	Residual Risk			Action	Action Party	Action Due Date
		S	P	RR		S	P	RR			
1. Incorrect removal of uraduct	Damage to product / asset	II	C	2	1. Use of correct tooling	II	E	3			
	schedule delay				2. Ensure flexible clean prior to going thorugh the tensioner system						

Project Name: MC 252 Deconstruction Project

Procedure Title: **3. Recovery of Flexible Jumpers**

General Activity: **2. Recovery of Surface Jumpers**

Specific Activity: **5. Remove Friction Clamp**

Hazard / Environmental Aspect	Consequence - Hazard Effect / Environmental Impact	Risk Matrix			Existing/Planned Mitigation/Risk Reducing Measures	Residual Risk			Action	Action Party	Action Due Date
		S	P	RR		S	P	RR			
1.											

Project Name: MC 252 Deconstruction Project

Procedure Title: **3. Recovery of Flexible Jumpers**

General Activity: **2. Recovery of Surface Jumpers**

Specific Activity: **6. Remove Buoyancy Modules**

Hazard / Environmental Aspect	Consequence - Hazard Effect / Environmental Impact	Risk Matrix			Existing/Planned Mitigation/Risk Reducing Measures	Residual Risk			Action	Action Party	Action Due Date
		S	P	RR		S	P	RR			
1. Buoyancy at depth not rated for	Damage to equipment	III	B	2	1. Spill kits	III	D	3	7. TCaws to provide MSDS sheet	Tim Caws	11/16/2010
	Personnel injury				2. Additional PPE requirements				8. Check with Trelleborg about mass of buoyancy affected by seawater ingress	Tim Caws	11/16/2010
	Environmental impact				3. Proper storage and handling						

Project Name: MC 252 Deconstruction Project

Procedure Title: **3. Recovery of Flexible Jumpers**

General Activity: **2. Recovery of Surface Jumpers**

Specific Activity: **7. Transfer 1st end over VLS**

Hazard / Environmental Aspect	Consequence - Hazard Effect / Environmental Impact	Risk Matrix			Existing/Planned Mitigation/Risk Reducing Measures	Residual Risk			Action	Action Party	Action Due Date
		S	P	RR		S	P	RR			
1. Handling through the VLS / Overstressing product / dropped object	Schedule / Damage	I	C	1	1. Use of VLS winches	I	E	3	9. Add to procedure visual inspection requirements	Maria Szczepaniak	11/12/2010
	Injury of Personnel	I	C	1	2. Competent personnel	I	E	3			
					3. Good communication						
					4. Visual inspection of 1st end rigging in workstation prior to lifting over VLS						
2. Tensioner failure	Schedule Delay / Damage	I	C	1	1. Two tensioners	I	E	3			
					2. Maintenance program						
					3. Analysis						
3. Debris on product	Damage to equipment	II	C	2	1. Clean product as required (Pressure washer available)	II	E	3			
	Personnel injury				2. Monitor product as recovered through workstation						
					3. Awareness while paying in on the tensioners (Observe product when coming into the VLS)						

Project Name: MC 252 Deconstruction Project

Procedure Title: **3. Recovery of Flexible Jumpers**

General Activity: **2. Recovery of Surface Jumpers**

Specific Activity: **8. Replace Flooding head with Pull head**

Hazard / Environmental Aspect	Consequence - Hazard Effect / Environmental Impact	Risk Matrix			Existing/Planned Mitigation/Risk Reducing Measures	Residual Risk			Action	Action Party	Action Due Date
		S	P	RR		S	P	RR			
1. Entrapped Pressure	Injury of Personnel	I	C	1	1. Ensure properly equalized during recovery - ROV to observe	I	E	3	10. Include in procedure to check for suction in flooding head	Maria Szczepaniak	11/12/2010
2. Leaks	Injury to personnel	I	C	1	1. PPE if any suspicion of leaks or product not being properly flushed	IV	E	3	11. Include in procedure to check for sheen on surface of water	Maria Szczepaniak	11/12/2010
	Environmental impact				2. Awareness						
					3. Spill kits available						

Project Name: MC 252 Deconstruction Project

Procedure Title: **3. Recovery of Flexible Jumpers**

General Activity: **2. Recovery of Surface Jumpers**

Specific Activity: **9. Secure 1st end to reel**

Hazard / Environmental Aspect	Consequence - Hazard Effect / Environmental Impact	Risk Matrix			Existing/Planned Mitigation/Risk Reducing Measures	Residual Risk			Action	Action Party	Action Due Date
		S	P	RR		S	P	RR			
1. Dropped Object	Personnel injury	IV	D	3	1. Use of correct rigging as specified by BP	IV	E	3	13. Include in procedure to check rigging used for securing daily	Maria Szczepaniak	11/12/2010
	Damage to product				2. No personnel under suspended load						
2. Reel capacity	Damage to product	II	D	2	1. packing analysis and drawing	II	E	3			
	schedule delay				2. best practice packing						
					3. Certified rigging fit for purpose						

Project Name: MC 252 Deconstruction Project

Procedure Title: **3. Recovery of Flexible Jumpers**

General Activity: **2. Recovery of Surface Jumpers**

Specific Activity: **9. Secure 1st end to reel**

Hazard / Environmental Aspect	Consequence - Hazard Effect / Environmental Impact	Risk Matrix			Existing/Planned Mitigation/Risk Reducing Measures	Residual Risk			Action	Action Party	Action Due Date
		S	P	RR		S	P	RR			
3. Working at height	Injury of Personnel	I	C	1	1. Working at height procedures	I	E	3			
					2. Avoid if possible						
					3. PPE						
					4. Competent personnel.						
4. Product on dancefloor	Damage to product				1. Check dancefloor for defects that might damage product						

Project Name: MC 252 Deconstruction Project

Procedure Title: **3. Recovery of Flexible Jumpers**

General Activity: **2. Recovery of Surface Jumpers**

Specific Activity: **10. Disconnect and Reposition DMA (Chain)**

Hazard / Environmental Aspect	Consequence - Hazard Effect / Environmental Impact	Risk Matrix			Existing/Planned Mitigation/Risk Reducing Measures	Residual Risk			Action	Action Party	Action Due Date
		S	P	RR		S	P	RR			
1. Dropped object	Damage to Assets	III	C	2	1. No safe overboarding restrictions	III	E	3			
					2. Survey landing area prior to disconnection						
					3. Attach to seafloor flexible if possible						
					4. Survey rigging before recovery						

Project Name: MC 252 Deconstruction Project

Procedure Title: **3. Recovery of Flexible Jumpers**

General Activity: **2. Recovery of Surface Jumpers**

Specific Activity: **11. Transfer 2nd end over VLS (BS)**

Hazard / Environmental Aspect	Consequence - Hazard Effect / Environmental Impact	Risk Matrix			Existing/Planned Mitigation/Risk Reducing Measures	Residual Risk			Action	Action Party	Action Due Date
		S	P	RR		S	P	RR			
1. Dropped Object / Swinging Load	Personnel injury	I	C	1	1. Use of VLS winches	I	E	3			
	Product damage				2. Taglines						
	Equipment damage				3. Engineered rigging						
					4. Weather conditions						
					5. Limited number of personnel in working station						
					6. barrier off deck area						
2. Overstressing product	Damage to product	II	C	2	1. Use of VLS winches to keep product in lay spread	II	E	3	12. Consider if handling analysis needs to be completed	Stian Samuelsen	11/12/2010
	Personnel Injury				2. Competent personnel						

Project Name: MC 252 Deconstruction Project

Procedure Title: **3. Recovery of Flexible Jumpers**

General Activity: **2. Recovery of Surface Jumpers**

Specific Activity: **12. Remove BS Adapter Plate & Slide of BS**

Hazard / Environmental Aspect	Consequence - Hazard Effect / Environmental Impact	Risk Matrix			Existing/Planned Mitigation/Risk Reducing Measures	Residual Risk			Action	Action Party	Action Due Date
		S	P	RR		S	P	RR			
1. Dropped Object	Injury to personnel	I	C	1	1. Secure product on dance floor prior to removal of BS	I	E	3			
	Damage to product				2. Correct Tooling						

Project Name: MC 252 Deconstruction Project

Procedure Title: **3. Recovery of Flexible Jumpers**

General Activity: **2. Recovery of Surface Jumpers**

Specific Activity: **12. Remove BS Adapter Plate & Slide of BS**

Hazard / Environmental Aspect	Consequence - Hazard Effect / Environmental Impact	Risk Matrix			Existing/Planned Mitigation/Risk Reducing Measures	Residual Risk			Action	Action Party	Action Due Date
		S	P	RR		S	P	RR			
	Schedule Delay				3. Barrier of area						
					4. No working under suspended load						
					5. follow procedures						
					6. Use proper handling technices for removal of heavy jewellery						

Project Name: MC 252 Deconstruction Project

Procedure Title: **3. Recovery of Flexible Jumpers**

General Activity: **2. Recovery of Surface Jumpers**

Specific Activity: **13. Secure 2nd end to Reel**

Hazard / Environmental Aspect	Consequence - Hazard Effect / Environmental Impact	Risk Matrix			Existing/Planned Mitigation/Risk Reducing Measures	Residual Risk			Action	Action Party	Action Due Date
		S	P	RR		S	P	RR			
1. Dropped Object	See 3.2.9								14. Include in procedure to put adequate protection on bend stiffener	Maria Szczepaniak	11/12/2010
									15. Include in procedure to check rigging used for securing 2nd end daily	Maria Szczepaniak	11/12/2010
2. Working at height	See 3.2.9										