ASEP Elmar (www.nov.com/ASEPElmar)	TITLE: 25D SERIES TT 6BOP ATEX NOLA >						
REV	ECO	PREPARED	CHECKED	APPROVED	DATE	NO: DD6901034212V02-A	PAGE 1 OF 2
A	PROD	M. WELSH	J. CRUICKSHANK	J. WEBSTER	16/02/2012		

ITEM 15 LOCATED BEHIND ITEM 7.

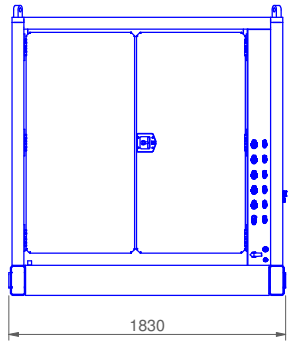

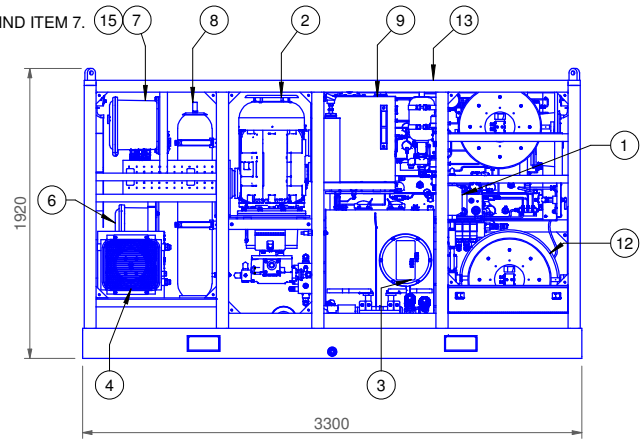

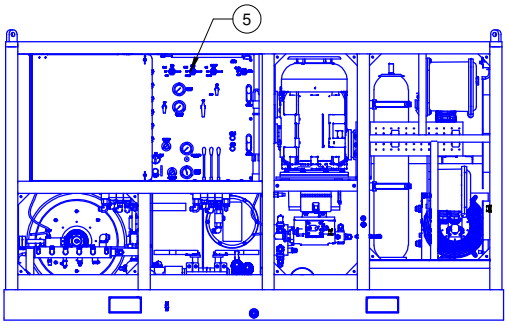

VIEW A

NOTES:

1. ITEMS 10, 11, 13, 14, 15, 16 & 17 NOT SHOWN.

ITEM	PART NO.	DESCRIPTION.	UNITS	QTY
1	6501036852	INTENSIFIER ASSY	EACH	1
2	6501036463	MOTOR/PUMP ASSY	EACH	2
3	6501035985	TANK ASSEMBLY	EACH	1
4	6501037043	COOLER ASSY	EACH	1
5	6501036840	CONTROL PANEL ASSY	EACH	1
6	6501037274	EEx-d INCOMER ASSY	EACH	1
7	6501037275	EEx-d STARTER A ASSY	EACH	1
8	6501036867	ACCUMULATOR ASSY	EACH	1
9	6501035958	TANK ASSEMBLY	EACH	1
10	6501037317	COVER ASSY	EACH	1
11	6501031019	FOOT PEDAL ASSEMBLY	EACH	1
12	6501036833	REEL ASSEMBLY	EACH	1
13	6501037271	FRAME ASSY	EACH	1
14	6501039440	MAIN SUPPLY	EACH	1
15	6501040051	EEx-d STARTER B ASSY	EACH	1
16	6501042996	IDENTIFICATION KIT	EACH	1
17	6501044394/2	HOSE AND TUBE LIST	EACH	1

This drawing is property of ASEP Elmar - © Copyright National Oilwell Varco 2011

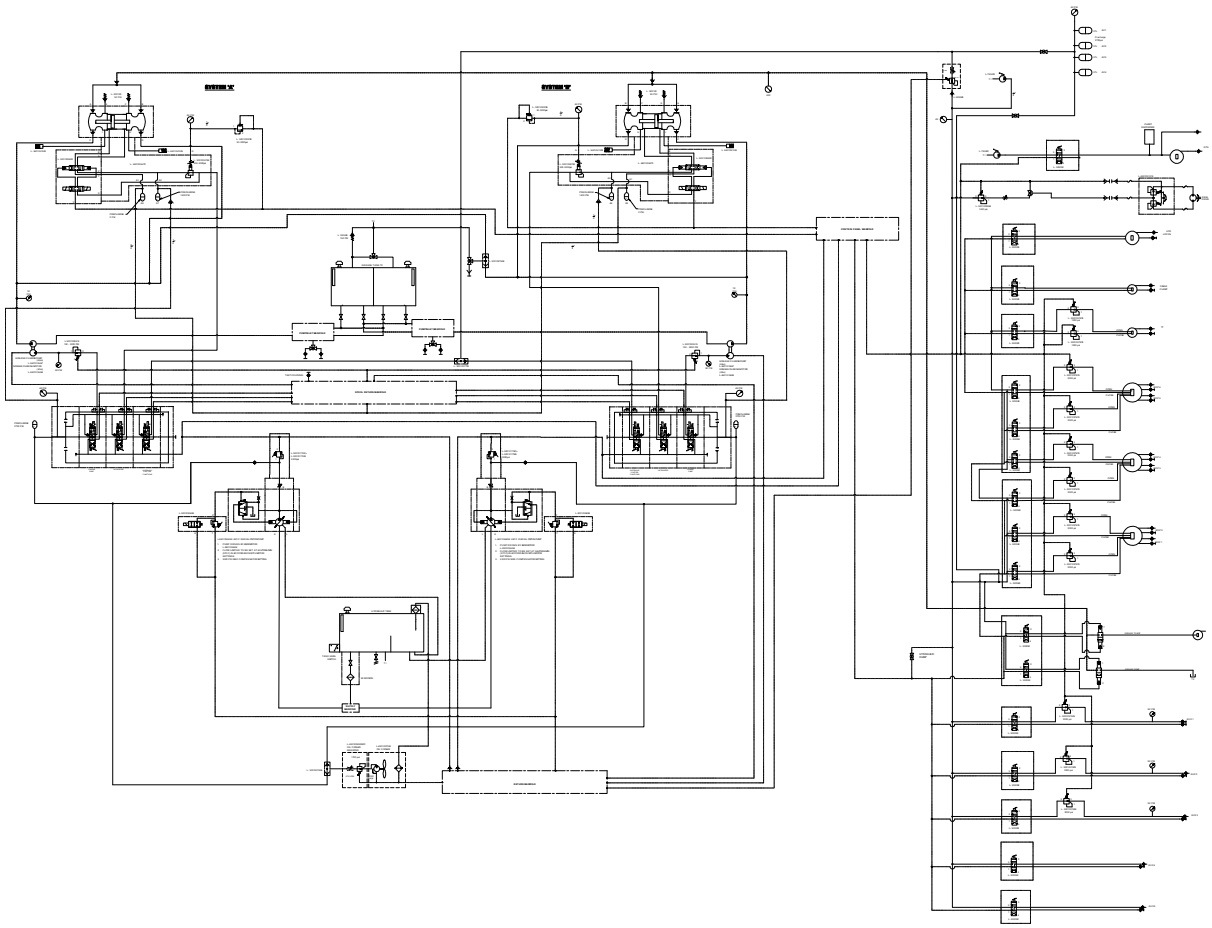

C	9642	J. WEBSTER 15/09/2012	I. MACDONALD	I. MACDONALD	Released
REV	ECO	DRAWN	CHECKED	APPROVED	PRINT STATUS

UNLESS OTHERWISE STATED

THIS DOCUMENT IS THE PROPERTY OF NOV ASEP ELMAR. IT IS STRICTLY CONFIDENTIAL AND MAY CONTAIN TRADE SECRETS. COPYING, ALTERATION, COPYRIGHT DISCLOSURE IN ANY MEDIUM AND TO ANY THIRD PARTY ARE STRICTLY PROHIBITED WITHOUT PRIOR WRITTEN CONSENT. THIS DOCUMENT IS SUBMITTED WITHOUT PREJUDICE TO ANY PATENTS OR DESIGNS PENDING OR TO BE APPLIED FOR BY THIS COMPANY.

SCHEMATIC DRAWING

ASEP Elmar
www.NOV.com/ASEPElmar

TITLE:
25D SERIES 6 BOP UNIT NOLA >

3rd ANGLE PROJECTION | SCALE: NTS | USED ON: 6901034212V02 | SHEET 1 OF 1 | DRAWING NO: HS6901034212V02-C

DO NOT SCALE FROM THIS DRAWING. WHEN A NEW UNIT IS THE FIRST TIME USED, ALL DIMENSIONS AND TOLERANCES MUST BE VERIFIED BY MEASUREMENT.

25mm 50mm 75mm 100mm 125mm 150mm 175mm 200mm 225mm 250mm

© Copyright National Oilwell Varco Inc 2011

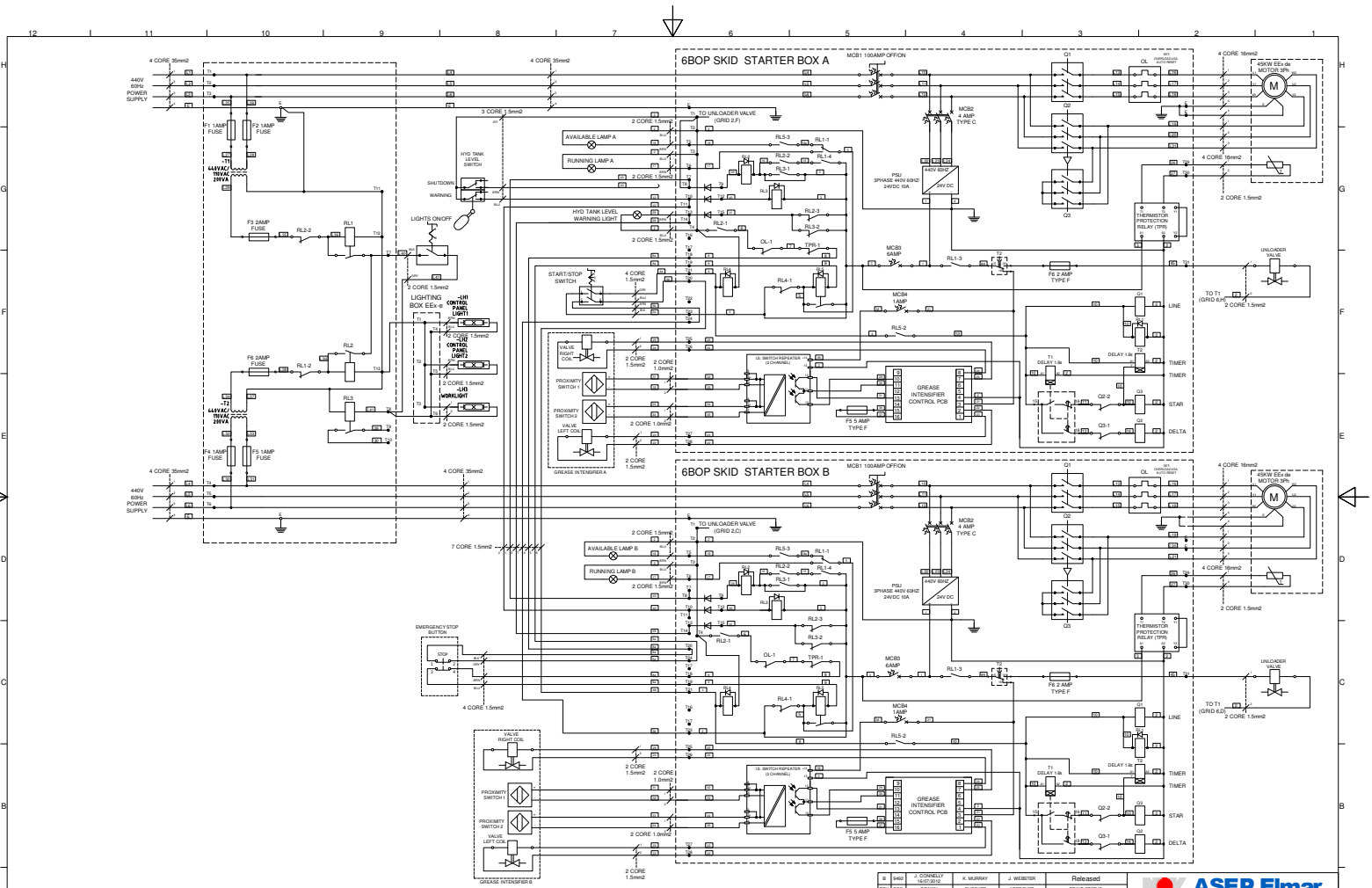

REV	ECO	DRAWN	CHECKED	APPROVED	PRINT STATUS
B	9462	J. CONNELLY 16.07.2012	K. MURRAY	J. WEBSTER	Released

UNLESS OTHERWISE STATED

THIS DOCUMENT IS THE PROPERTY OF NOV ASEP ELMAR. IT IS STRICTLY CONFIDENTIAL AND MAY NOT BE COPIED OR REPRODUCED, ALTERATION, COPYING OR DISCLOSURE IN ANY MEDIUM AND TO ANY THIRD PARTY ARE STRICTLY PROHIBITED WITHOUT PRIOR WRITTEN CONSENT. THIS DOCUMENT MAY BE SUBMITTED WITHOUT PREJUDICE TO ANY PATENTS OR DESIGNS PENDING OR TO BE APPLIED FOR BY THE COMPANY.

SCHEMATIC DIAGRAM

ASEP Elmar
www.NOV.com/ASEPElmar

TITLE: 25D SERIES TT 6BOP ATEX NOLA >

3rd ANGLE PROJECTION | SCALE: NTS | USED ON: 6900/3340/3V02 | SHEET 1 OF 2 | DRAWING No. ES6901034212V02-B

© Copyright National Oilwell Varco Inc 2011

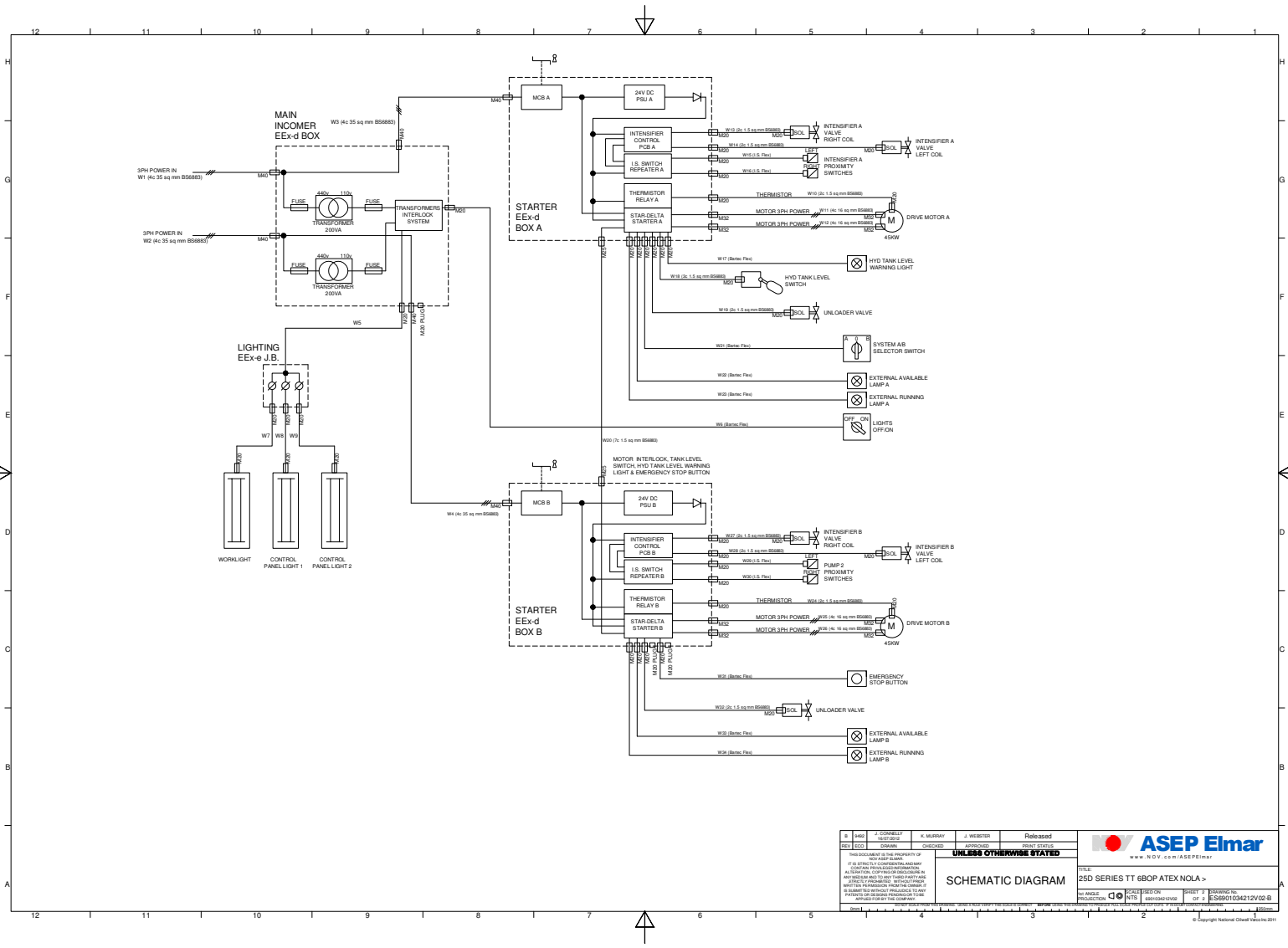

B	9492	J. CONNELLY 16.07.2012	K. MURRAY	J. WEBSTER	Released
REV	ECO	DRAWN	CHECKED	APPROVED	PRINT STATUS

UNLESS OTHERWISE STATED

THIS DOCUMENT IS THE PROPERTY OF NOV ASEP ELMAR. IT IS STRICTLY CONFIDENTIAL AND MAY NOT BE COPIED OR REPRODUCED, ALTERATION, COPYING OR DISCLOSURE IN ANY MEDIUM AND TO ANY THIRD PARTY ARE STRICTLY PROHIBITED WITHOUT PRIOR WRITTEN CONSENT. THIS DOCUMENT IS SUBMITTED WITHOUT PREJUDICE TO ANY PATENTS OR DESIGNS PENDING OR TO BE APPLIED FOR BY THE COMPANY.

ASEP Elmar
www.NOV.com/ASEPElmar

SCHEMATIC DIAGRAM

TITLE: 25D SERIES TT 6BOP ATEX NOLA >

3rd ANGLE PROJECTION | SCALE N/TS | USED ON 6900/0342/12V02 | SHEET 2 OF 2 | DRAWING No. ES6901034212V02-B

DO NOT SCALE FROM DRAWING. WHEN A NEW UNIT IS ORDERED, REFER TO LATEST ISSUE OF DRAWING. 25mm | 50mm | 100mm | 150mm | 200mm | 250mm

© Copyright National Oilwell Varco Inc 2011

ASEP Elmar
www.nov.com/ASEPElmar

TITLE: FLOW DIVIDER ASSY 3.563" DEC BOP

REV	ECO	PREPARED	CHECKED	APPROVED	DATE		PAGE 1
1		W. TOTTEN	G. SENKBEIL	R. JOENSEN	27/05/2013	NO: DD6501056503-1	OF 2

PROTOTYPE DRAWING

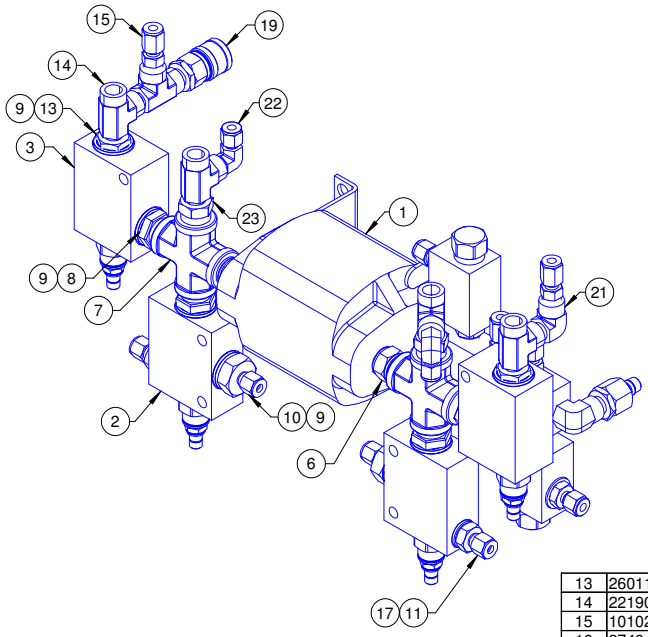

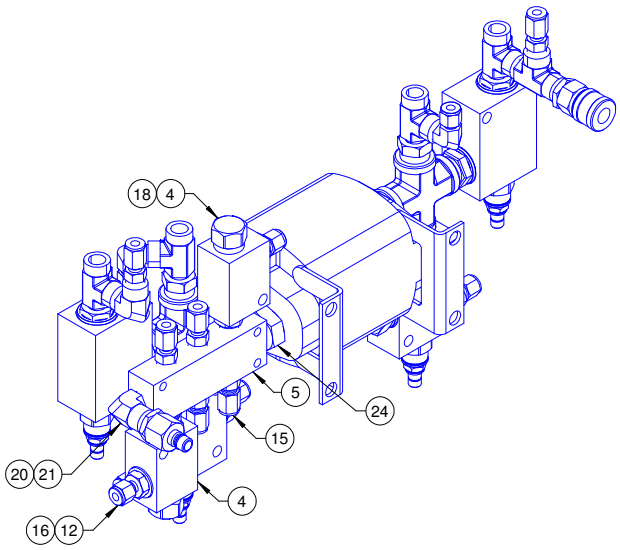

ITEM	PART NO.	DESCRIPTION	UNITS	QTY	ITEM	PART NO.	DESCRIPTION	UNITS	QTY
13	260110	RED BUSH	EACH	2	1	5001044242	VLV FLOW DIVERTER	EACH	1
14	221900	STREET TEE	EACH	5	2	5001044247	VLV SEQUENCE	EACH	2
15	101020	MALE CONNECTOR	EACH	6	3	500209	RELIEF VALVE	EACH	2
16	874040	DOWTY SEAL	EACH	4	4	5001045377	CHECK VALVE	EACH	2
17	874010	DOWTY SEAL	EACH	2	5	740600	MANIFOLD 8Px1/4N-SS	EACH	1
18	208550	HEX ADAPTER NIPPLE	EACH	2	6	200500	M-HEX NIPPLE	EACH	2
19	585300	QC-COUPLER	EACH	1	7	260220	CROSS	EACH	2
20	585200	QC-NIPPLE	EACH	1	8	208000	HEX ADAPTER NIPPLE	EACH	4
21	212000	STREET ELBOW	EACH	2	9	874030	DOWTY SEAL	EACH	8
22	120620	MALE ELBOW	EACH	2	10	100170	MALE CONNECTOR	EACH	2
23	245500	REDUCING BUSH	EACH	2	11	100160	MALE CONNECTOR	EACH	2
24	203900	REDUCING NIPPLE	EACH	1	12	100200	MALE CONNECTOR	EACH	2

SEE SHEET 2 FOR HOSE & TUBING INFORMATION

This drawing is property of ASEP Elmar - © Copyright National Oilwell Varco 2013

PROTOTYPE DRAWING	
PRE-PRODUCTION CHANGES	
MOD No	DESCRIPTION OF CHANGE
1	NEW DRAWING
2	ADDED DASHED LINES AROUND SELF-CONTAINED FLOW DIVIDER
3	REMOVED VALVE SETTING VALUES AND ADDED TP NOTE

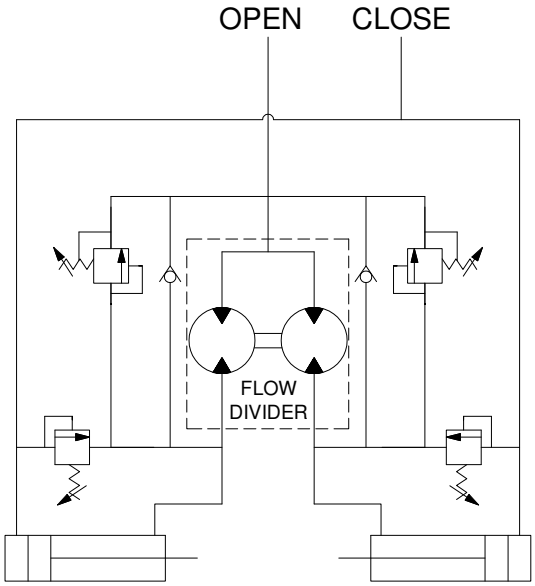

3

SEE TP-10004993 FOR VALVE SETTING INFORMATION

REV	ECO	DRAWN	CHECKED	APPROVED	PRINT STATUS
3		W. TOTTEN 05/06/2013	G. SENKBEIL	R. JOENSEN	Released

THIS DOCUMENT IS THE PROPERTY OF NOV ASEP ELMAR. IT IS STRICTLY CONFIDENTIAL AND MAY CONTAIN PRIVILEGED INFORMATION. ALTERATION, COPYING OR DISCLOSURE IN ANY MEDIUM AND TO ANY THIRD PARTY ARE *STRICTLY PROHIBITED* WITHOUT PRIOR WRITTEN PERMISSION FROM THE OWNER. IT IS SUBMITTED WITHOUT PREJUDICE TO ANY PATENTS OR DESIGNS PENDING OR TO BE APPLIED FOR BY THE COMPANY.

UNLESS OTHERWISE STATED

SCHEMATIC DIAGRAM

ASEP Elmar
www.NOV.com/ASEPElmar

TITLE:
FLOW DIVIDER ASSY 3.563" DEC BOP

1st ANGLE PROJECTION	SCALE	USED ON	SHEET	DRAWING No.
	NTS	5001029424	1 OF 1	HS6501056503-3

DO NOT SCALE FROM THIS DRAWING. USING A RULE VERIFY THIS SCALE IS CORRECT **BEFORE** USING THIS DRAWING TO PRODUCE FULL SCALE PROFILE CUT OUTS. IF IN DOUBT CONTACT ENGINEERING.

0mm 250mm

© Copyright National Oilwell Varco Inc 2011

NOV Elmar	Document number	EDC-1034212V02001
	Title	ACCUMULATOR STORAGE CALC - NOLA
	Date	29/01/2014

Introduction

The following calculation determines the available accumulator volume present on control module L-6901034212V02 and compares this against the actual volume required to perform a close/open/close operation on dual Wireline Valve L-9701034202.

Accumulators					Working Pressure (bar)		Volume (l)		
Precharge pressure (bar)	Rated volume (l)	Available volume (l)	Qty	Nom vol. (l)	Max	Min	@ Max Pressure	@ Min Pressure	Fluid Stored (l)
141.5	37.0	35.2	4	140.8	227	157	87.8	114.2	26.4

Wireline Valve ram volumes		
Open (l)	Close (l)	COC (l)
3.2	3.2	9.60

This COC value is equivalent to 1.5*(Open+Close)

Complete COC cycles per set of rams (2)
2.75

Conclusion

The calculation shows that there is 26.4 litres of stored fluid and that 19.2 litres is required to have sufficient capacity to close/open/close both sets of rams on Wireline Valve L-9701034202, therefore it can be concluded that the four 37 litres accumulators fitted to L-6901034212V02 is sufficient.

Further information

Wireline Valve control: 6 x BOP ram open/close/isolate (close @ 3,000 psi, open @ 2,000 psi)