Reviewed by
Joe Steckman
6.12.13

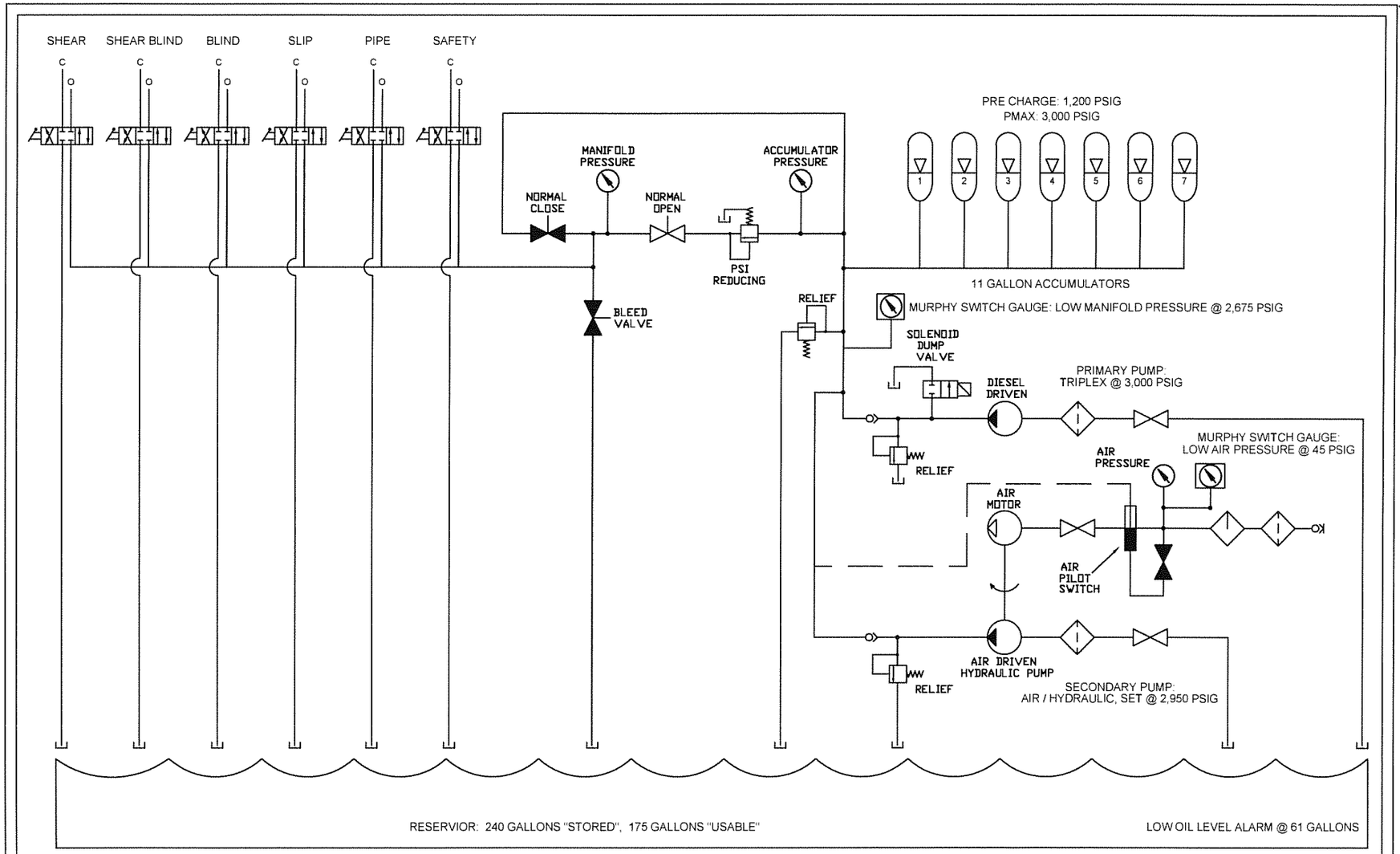

B & C 11939830

Note: Master gauge in box not adjustable.

PRODUCTS AND TECHNOLOGY DEVELOPED IN U.S.A. OR BY CITIZENS OF THE U.S.A. ARE DEEMED TO BE OF U.S. ORIGIN AND THEREBY SUBJECT TO U.S. EXPORT CONTROL LAWS. THE EXPORT OR REEXPORT OF U.S. ORIGIN TECHNOLOGY BY ANY MEANS, INCLUDING DATA TRANSFER, IS PROHIBITED EXCEPT IN ACCORDANCE WITH U.S. LAW AND HALLIBURTON POLICY.

THE INFORMATION CONTAINED HEREON SHALL BE CONSIDERED THE SOLE PROPERTY OF HALLIBURTON ENERGY SERVICES, A DIVISION OF HALLIBURTON COMPANY AND THE RECIPIENT THEREOF AGREES NOT TO DISCLOSE SAID INFORMATION TO PARTIES OUTSIDE THE RECIPIENT'S ORGANIZATION AND NOT TO USE OR DUPLICATE SAID INFORMATION FOR ANY PURPOSE EXCEPT AS SPECIFIED BY HALLIBURTON ENERGY SERVICES WITHOUT THE WRITTEN PERMISSION OF HALLIBURTON ENERGY SERVICES

UNLESS OTHERWISE SPECIFIED

1. DO NOT SCALE DRAWING
2. DIMS. ARE IN INCHES
3. INTERPRET DIM TOL. PER ASME Y14.5M-1994
4. REMOVE ALL BURRS AND SHARP CORNERS
5. INSIDE CORNERS R .032, OUTSIDE CORNERS R .020 OR CHAM .020 X 45°
6. MACHINE FINISH

DESIGNED		
DRAWN	KS	6-12-2013
REFERENCE		
SUPERCEDES		

THIRD ANGLE PROJECTION

HALLIBURTON — HALLIBURTON ENERGY SERVICES, HOUSTON, TEXAS

TITLE: **Accumulator Skid Model No. ACC-51 Hydraulic Schematic 11939830**

SIZE D | DWG. NO. | REV

SCALE: N/A | WEIGHT: - | SHEET 1 OF 1

Reviewed Schematic to Unit Hydraulics for [signature] 2/24/14

Keiam Shum 2/24/14

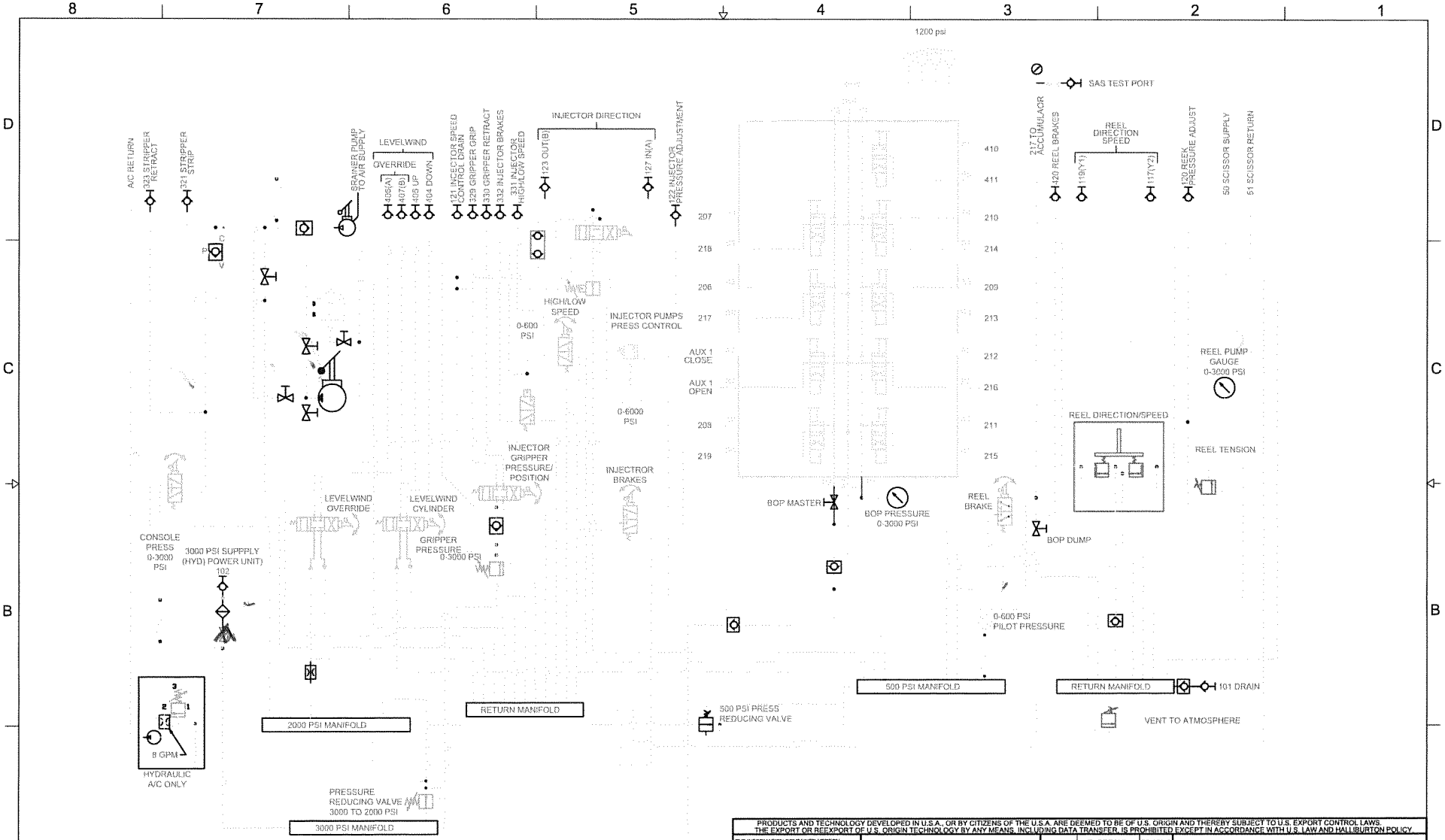

PRODUCTS AND TECHNOLOGY DEVELOPED IN U.S.A., OR BY CITIZENS OF THE U.S.A. ARE DEEMED TO BE OF U.S. ORIGIN AND THEREBY SUBJECT TO U.S. EXPORT CONTROL LAWS. THE EXPORT OR REEXPORT OF U.S. ORIGIN TECHNOLOGY BY ANY MEANS, INCLUDING DATA TRANSFER, IS PROHIBITED EXCEPT IN ACCORDANCE WITH U.S. LAW AND HALLIBURTON POLICY.

THE INFORMATION CONTAINED HEREON SHALL BE CONSIDERED THE SOLE PROPERTY OF HALLIBURTON ENERGY SERVICES, A DIVISION OF HALLIBURTON COMPANY, AND THE RECIPIENT THEREOF AGREES NOT TO DISCLOSE SAID INFORMATION TO PARTIES OUTSIDE THE RECIPIENT'S ORGANIZATION AND NOT TO USE OR DUPLICATE SAID INFORMATION FOR ANY PURPOSE EXCEPT AS SPECIFIED BY HALLIBURTON ENERGY SERVICES WITHOUT THE WRITTEN PERMISSION OF HALLIBURTON ENERGY SERVICES.

UNLESS OTHERWISE SPECIFIED

TOLERANCES
FABRICATION
.X = ± .25
.XX = ± .125
.XXX = ± .060
ANGLES ± 3°
MACHINE
.X = ± .030
.XX = ± .015
.XXX = ± .005
.XXXX = ± .0010
ANGLES ± 1/2°

1. DO NOT SCALE DRAWING
2. DIMS. ARE IN INCHES
3. INTERPRET DIM TOL. PER ASME Y14.5M-1994
4. REMOVE ALL BURRS AND SHARP CORNERS
5. INSIDE CORNERS R. .032, OUTSIDE CORNERS R. .020 OR CHAM. .020 X 45°
6. MACHINE FINISH

DESIGNED	R. BREAUX	03/22/13
DRAWN	BHASKAR	03/22/13
REFERENCE:		
SUPERCEDES		

THIRD ANGLE PROJECTION

HALLIBURTON — HALLIBURTON ENERGY SERVICES HOUSTON, TEXAS

TITLE: CONSOLE ASSEMBLY, BOP & STRIPPER CONTROLS, UNIT 10053796 COILED TUBING

SIZE	DWG. NO.	REV
D	D00737946	A

SCALE: FULL | WEIGHT: | SHEET 1 OF 1

ARUN KUMAR 05/14/13 — Form Revision B

AUTOCAD

Reviewed by
Joe Steggman
6.10.13
Miguel Laticlair

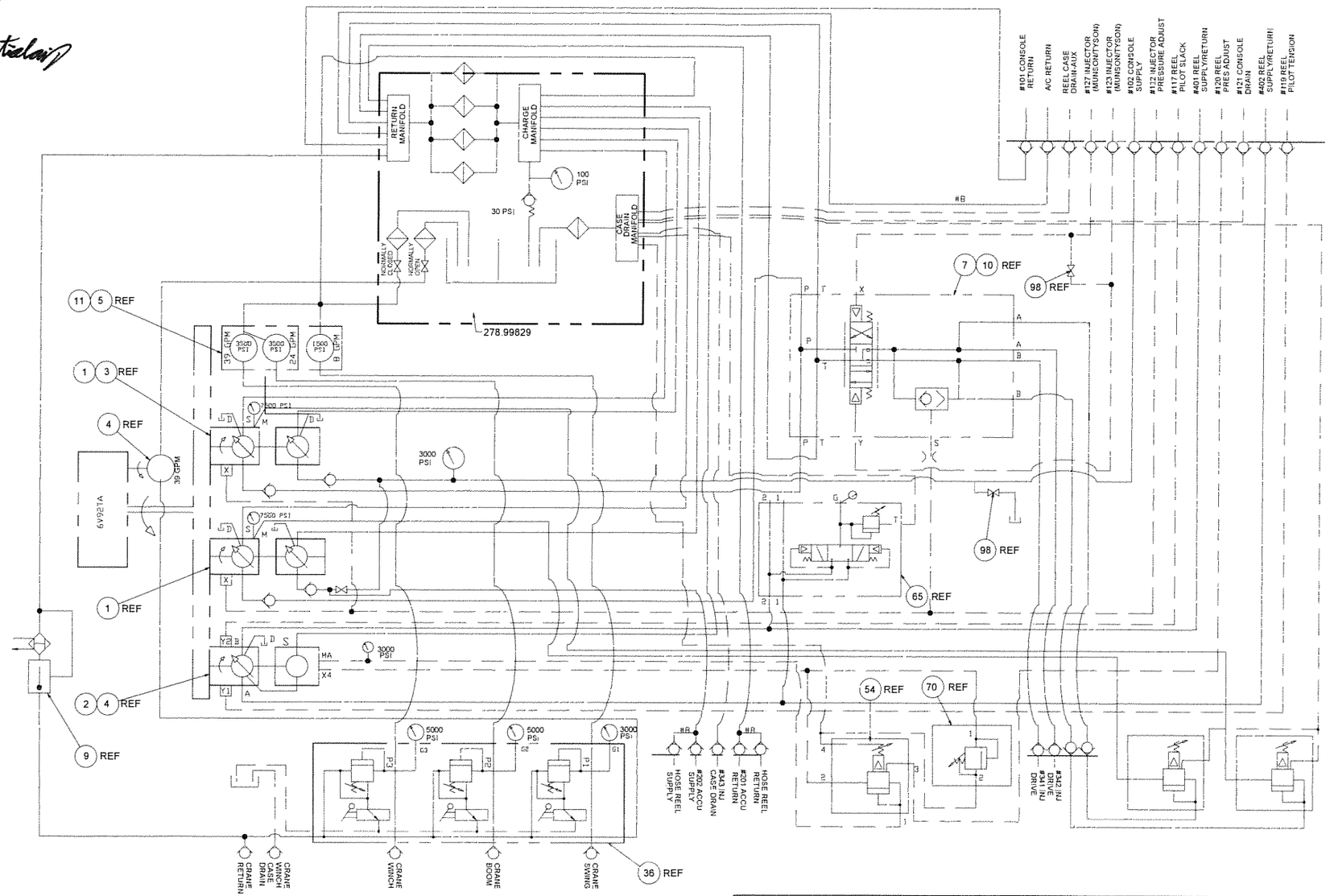

PRODUCTS AND TECHNOLOGY DEVELOPED IN U.S.A., OR BY CITIZENS OF THE U.S.A. ARE DEEMED TO BE OF U.S. ORIGIN AND THEREBY SUBJECT TO U.S. EXPORT CONTROL LAWS. THE EXPORT OR REEXPORT OF U.S. ORIGIN TECHNOLOGY BY ANY MEANS, INCLUDING DATA TRANSFER, IS PROHIBITED EXCEPT IN ACCORDANCE WITH U.S. LAW AND HALLIBURTON POLICY.

THE INFORMATION CONTAINED HEREON SHALL BE CONSIDERED THE SOLE PROPERTY OF HALLIBURTON ENERGY SERVICES, A DIVISION OF HALLIBURTON COMPANY, AND THE RECIPIENT THEREOF AGREES NOT TO DISCLOSE SAID INFORMATION TO PARTIES OUTSIDE THE RECIPIENT'S ORGANIZATION AND NOT TO USE OR DUPLICATE SAID INFORMATION FOR ANY PURPOSE EXCEPT AS SPECIFIED BY HALLIBURTON ENERGY SERVICES WITHOUT THE WRITTEN PERMISSION OF HALLIBURTON ENERGY SERVICES

UNLESS OTHERWISE SPECIFIED

TOLERANCES
FABRICATION
X = ± .25
XX = ± .125
XXX = ± .060
ANGLES ± 3°
MACHINE
X = ± .030
XX = ± .015
XXX = ± .005
XXXX = ± .0010
ANGLES ± 1/2°

1. DO NOT SCALE DRAWING
2. DIMS. ARE IN INCHES
3. INTERPRET DIM TOL. PER ASME Y14.5M-1994
4. REMOVE ALL BURRS AND SHARP CORNERS
5. INSIDE CORNERS R. .032, OUTSIDE CORNERS R. .020 OR CHAM. .020 X 45°
6. MACHINE FINISH

DESIGNED	R. BREAUX	04/04/13
DRAWN	ARUN KUMAR	04/04/13
REFERENCE		
SUPERCEDES		

THIRD ANGLE PROJECTION

HALLIBURTON — HALLIBURTON ENERGY SERVICES HOUSTON, TEXAS

TITLE: INSTALLATION, HYDRAULIC, PUMPS, RESERVOIRS, COOLER, PIPING, FILTERS, UNIT 10843532

SIZE	DWG. NO.	REV
D	D00742763	A

SCALE NTS | WEIGHT - | SHEET 1 OF 1

ARUN KUMAR 04/04/13

Form Revision B

AUTOCAD