Establishing Mooring Foundations & Seafloor Interface

Matt Smith

Delmar Systems, Inc.

Establishing Mooring Foundations

Installation of Anchors

Example for Comparison

- 5,000’ Water Depth
- Flat Seafloor
- Four System Examples
  - Catenary Systems with DEA
  - Semi-Taut System with Drag-Installed VLA
  - Taut System with Suction Pile
  - Taut System with OMNI-Max™

DEA Installation

DEA Installation

Initial Angle (Deg)	Rudder Angle (deg)	AHV Distance (ft)
27.98	16.8	3891
End Depth (ft)	**AHV Tension (kips)**	**Max Depth (ft)**
0	244	-2438

Bollard Pull	
Kips	70.3
MT	31.89

Graph

DEA Installation

Initial Angle (Deg)	Rudder Angle (deg)	AHV Distance (ft)
51.91	46.6	15143
End Depth (ft)	**AHV Tension (kips)**	**Max Depth (ft)**
0	460	-4082

Bollard Pull

Kips	334.75
MT	151.84

Graph

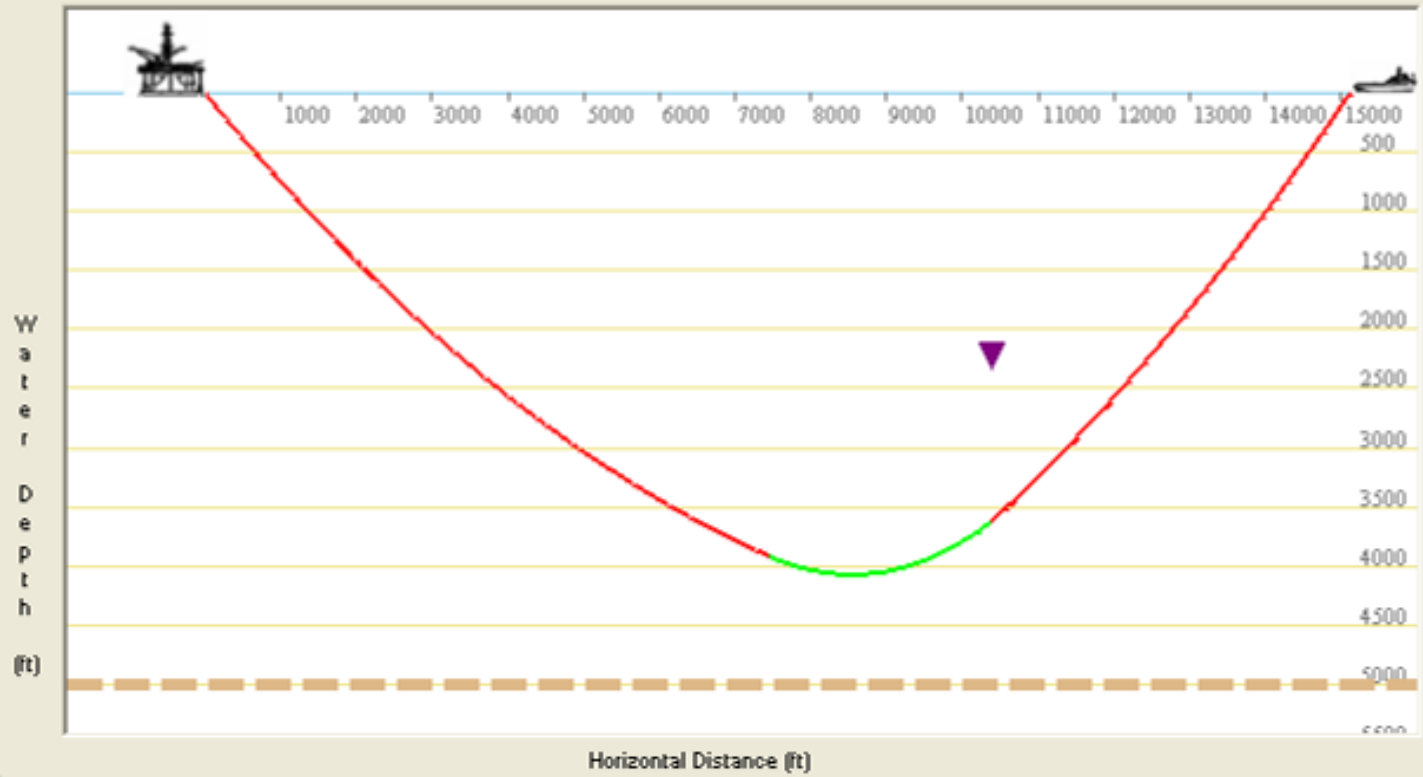

DEA Installation

Initial Angle (Deg)	Rudder Angle (deg)	AHV Distance (ft)
38.82	32	13179
End Depth (ft)	**AHV Tension (kips)**	**Max Depth (ft)**
0	384	-5479

Bollard Pull

Kips	205.97
MT	93.43

Graph

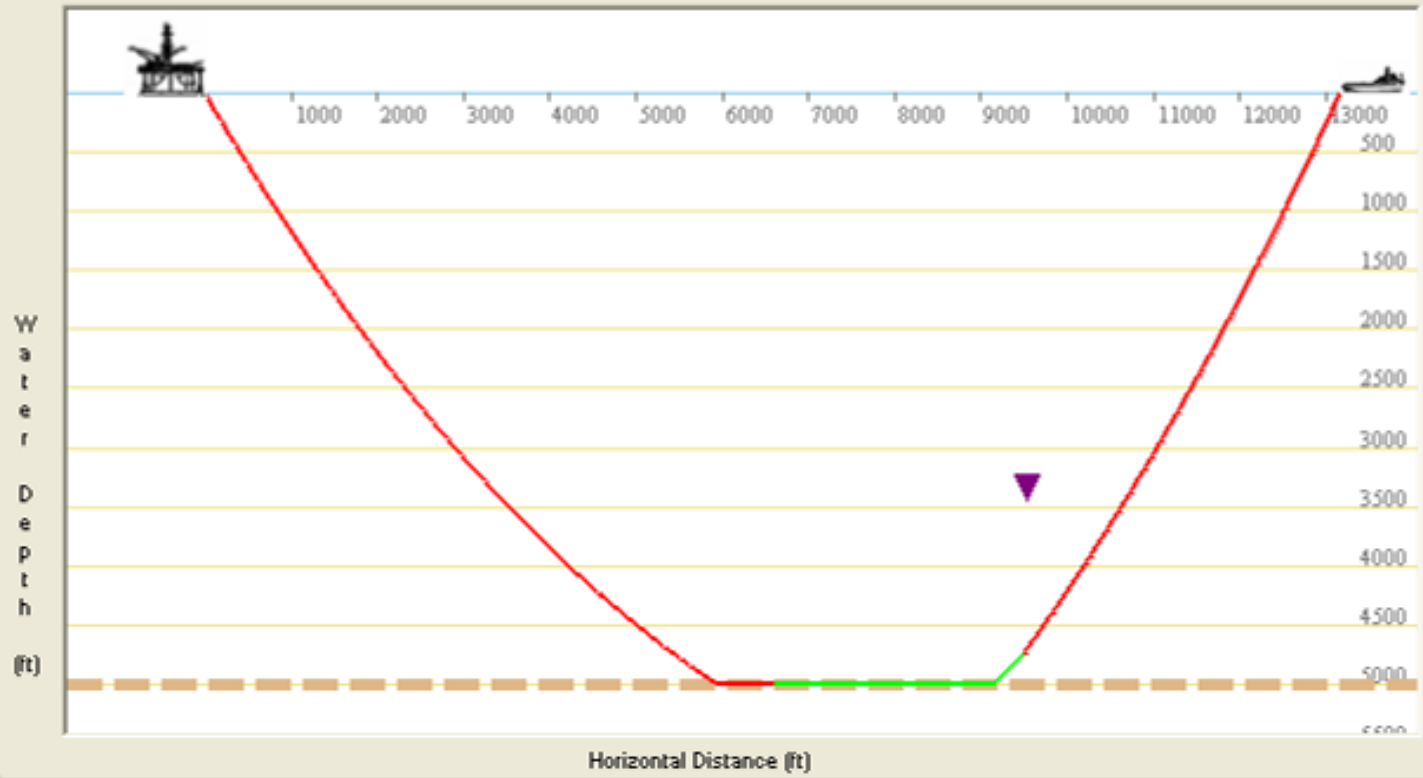

DEA Proof Load (550-kips)

Fairlead Angle (Deg)	Grounded Length (ft)	Anchor Angle (deg)	Horizontal Bollard Pull	
50.1	876	0	Kips	421.94
Anchor Distance (ft)	**Anchor Tension (kips)**	**Total Stretch (ft)**	MT	191.39
10130	346	43.6		

Graph

DEA Operating (425-kips)

Fairlead Angle (Deg)	Grounded Length (ft)	Anchor Angle (deg)
46.4	1565	0
Anchor Distance (ft)	**Anchor Tension (kips)**	**Total Stretch (ft)**
10009	172	32.4

Horizontal Bollard Pull

Kips	307.77
MT	139.6

Graph

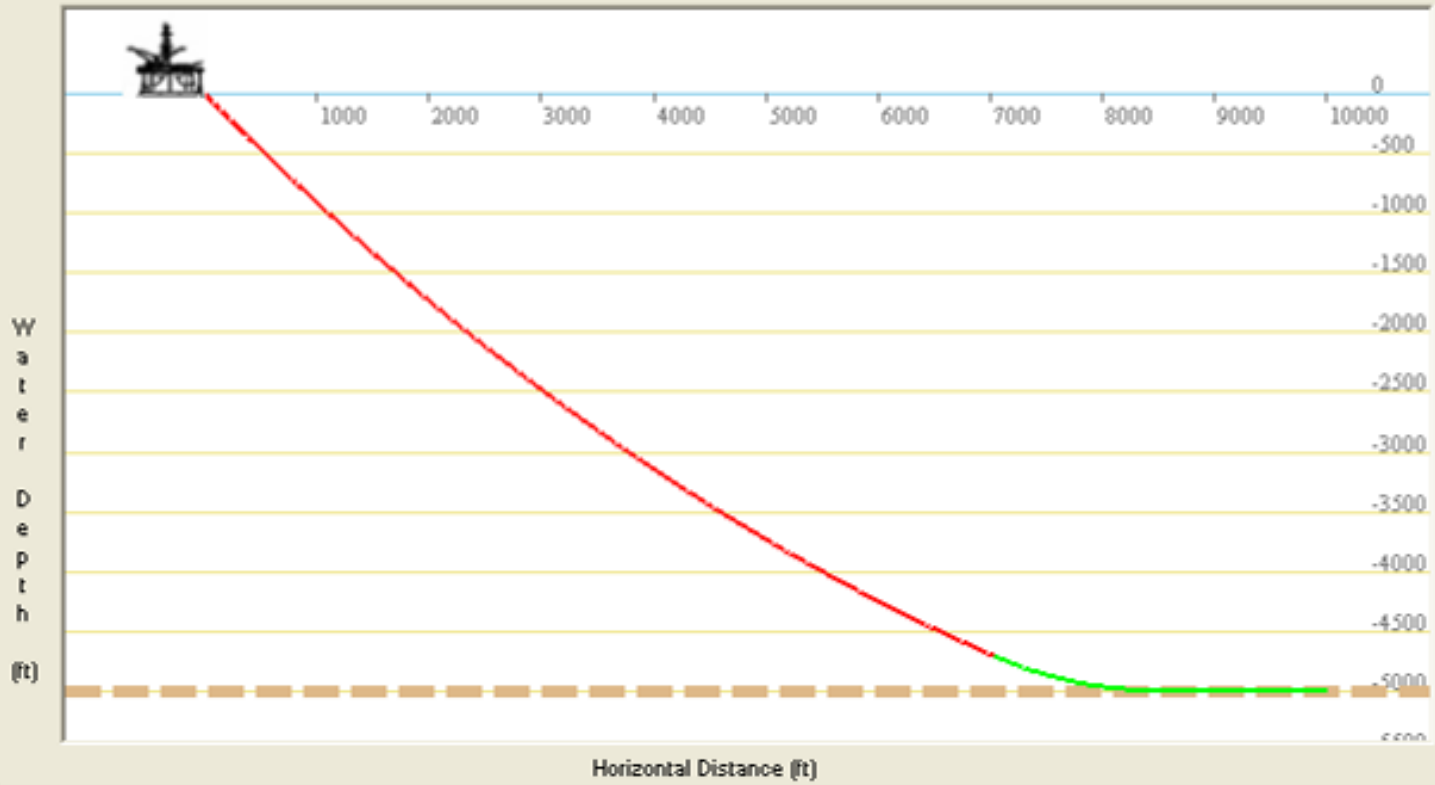

DEA Survival (300-kips)

Fairlead Angle (Deg)	Grounded Length (ft)	Anchor Angle (deg)	Horizontal Bollard Pull	
40.4	2297	0	Kips	194.44
Anchor Distance (ft)	**Anchor Tension (kips)**	**Total Stretch (ft)**	MT	88.19
9825	0	21.5		

Graph

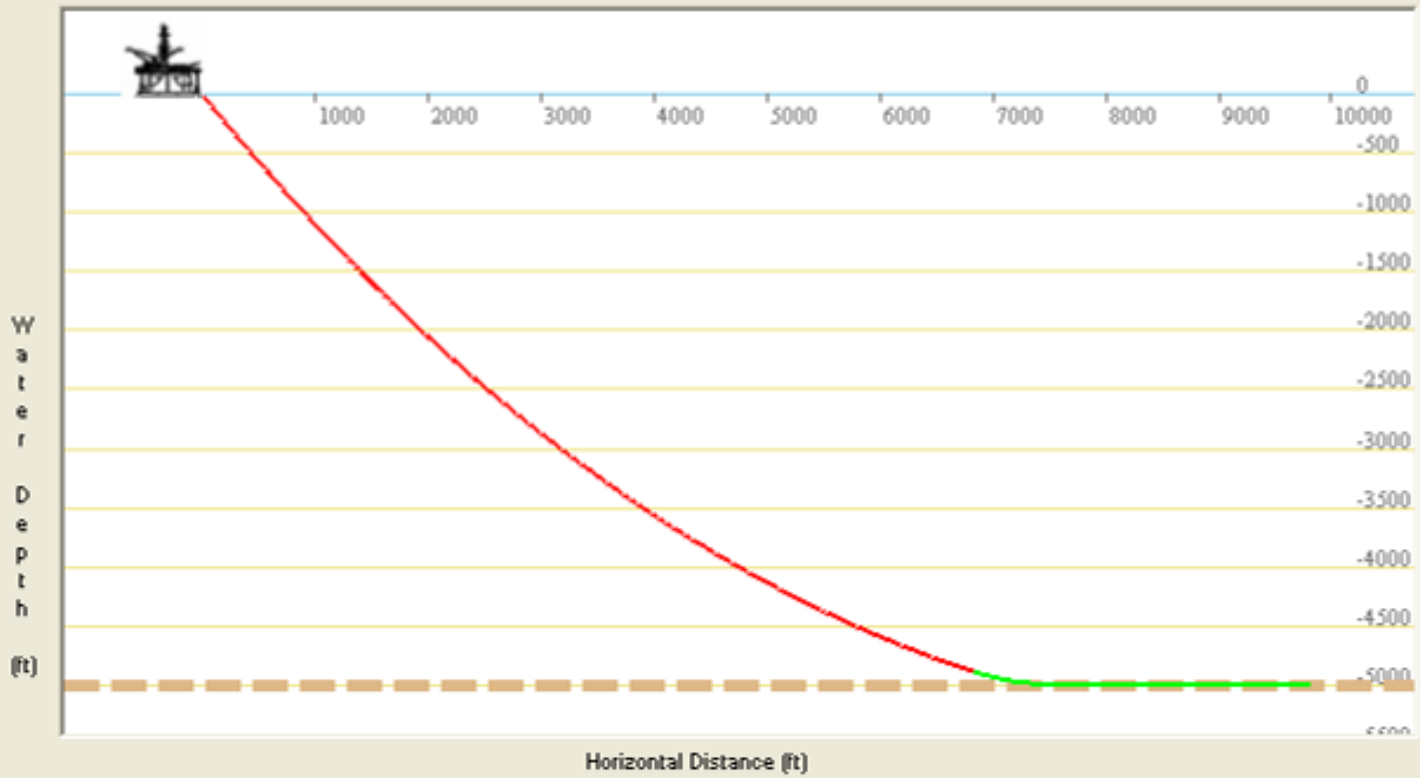

DEA Pattern

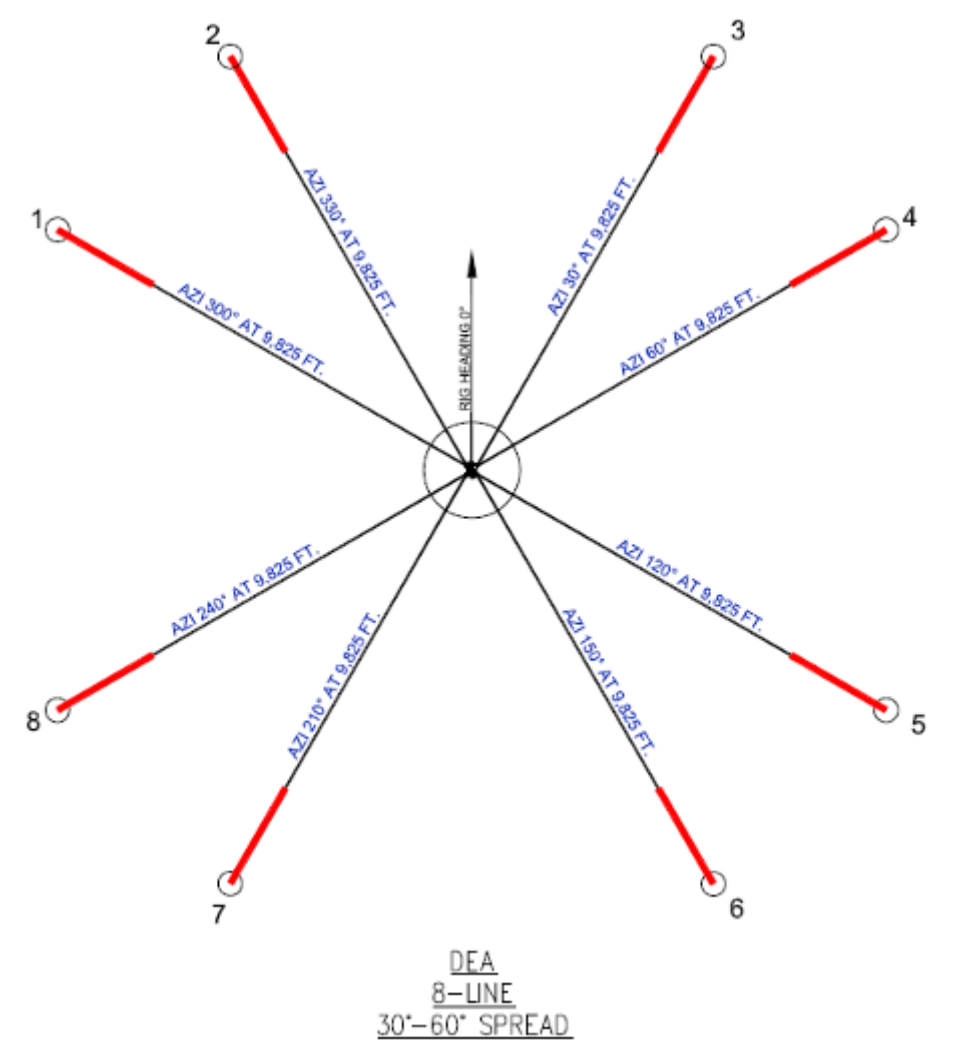
1
2
3
4
5
6
7
8
AZI 300° AT 9.825 FT.
AZI 330° AT 9.825 FT.
AZI 30° AT 9.825 FT.
AZI 60° AT 9.825 FT.
AZI 120° AT 9.825 FT.
AZI 150° AT 9.825 FT.
AZI 210° AT 9.825 FT.
AZI 240° AT 9.825 FT.
RIG HEADING 0°
DEA
8-LINE
30°-60° SPREAD

VLA Installation

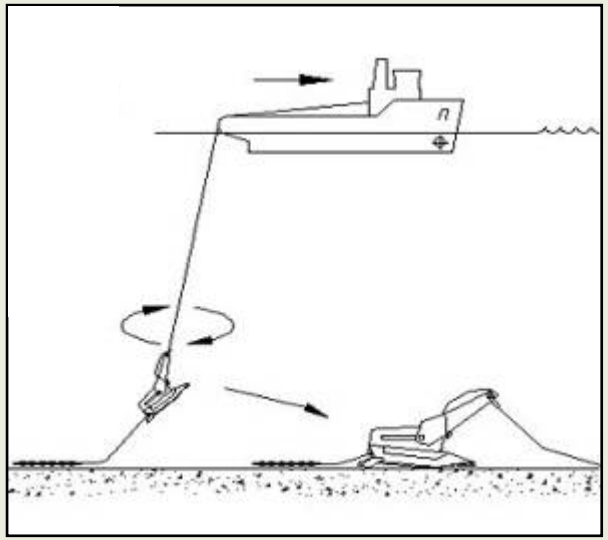

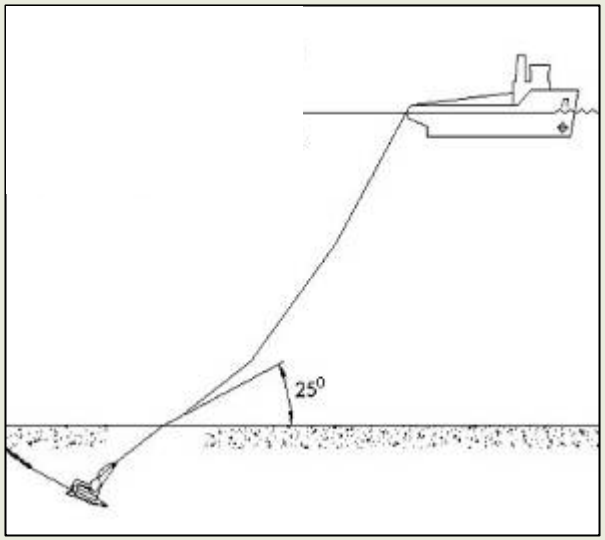

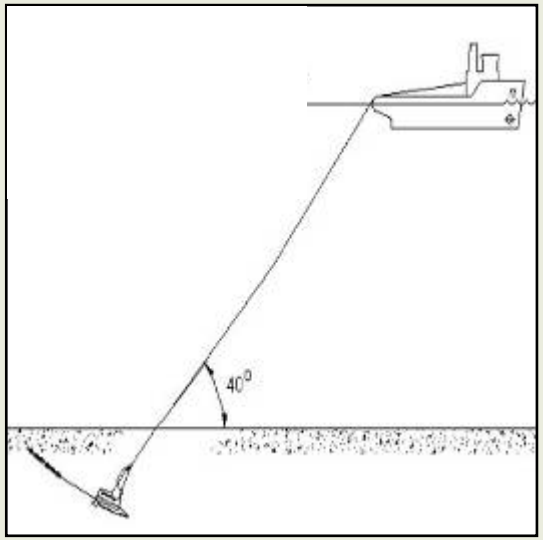

VLA Drag-In (250-kips @ ML)

Fairlead Angle (Deg)	Grounded Length (ft)	Anchor Angle (deg)
45.9	0	1.2
Anchor Distance (ft)	**Anchor Tension (kips)**	**Total Stretch (ft)**
10415	252	26.5

Horizontal Bollard Pull

Kips	251.34
MT	114.01

Graph

VLA Shear Pin Step

Fairlead Angle (Deg)	Grounded Length (ft)	Anchor Angle (deg)
38.3	0	41.7
Anchor Distance (ft)	**Anchor Tension (kips)**	**Total Stretch (ft)**
4625	498	29.1

Horizontal Bollard Pull

Kips	371.87
MT	168.68

Graph

VLA Connected Survival

Fairlead Angle (Deg)	Grounded Length (ft)	Anchor Angle (deg)
40	1108	0
Anchor Distance (ft)	**Anchor Tension (kips)**	**Total Stretch (ft)**
10179	157	19.2

Horizontal Bollard Pull

Kips	176.77
MT	80.18

Graph

VLA Pattern

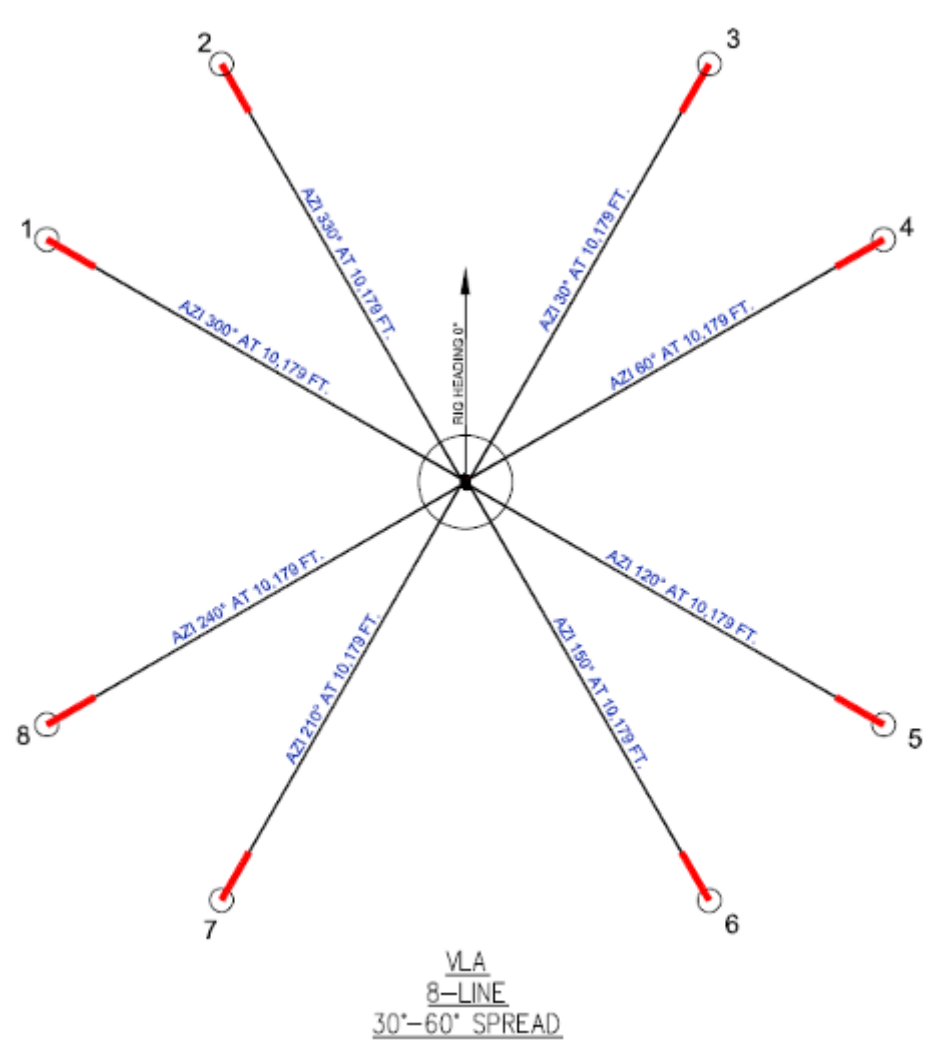
1
2
3
4
5
6
7
8
AZI 300° AT 10,179 FT.
AZI 330° AT 10,179 FT.
AZI 30° AT 10,179 FT.
AZI 60° AT 10,179 FT.
AZI 120° AT 10,179 FT.
AZI 150° AT 10,179 FT.
AZI 210° AT 10,179 FT.
AZI 240° AT 10,179 FT.
RIG HEADING 0°
VLA
8–LINE
30°–60° SPREAD

OMNI-Max™ Installation

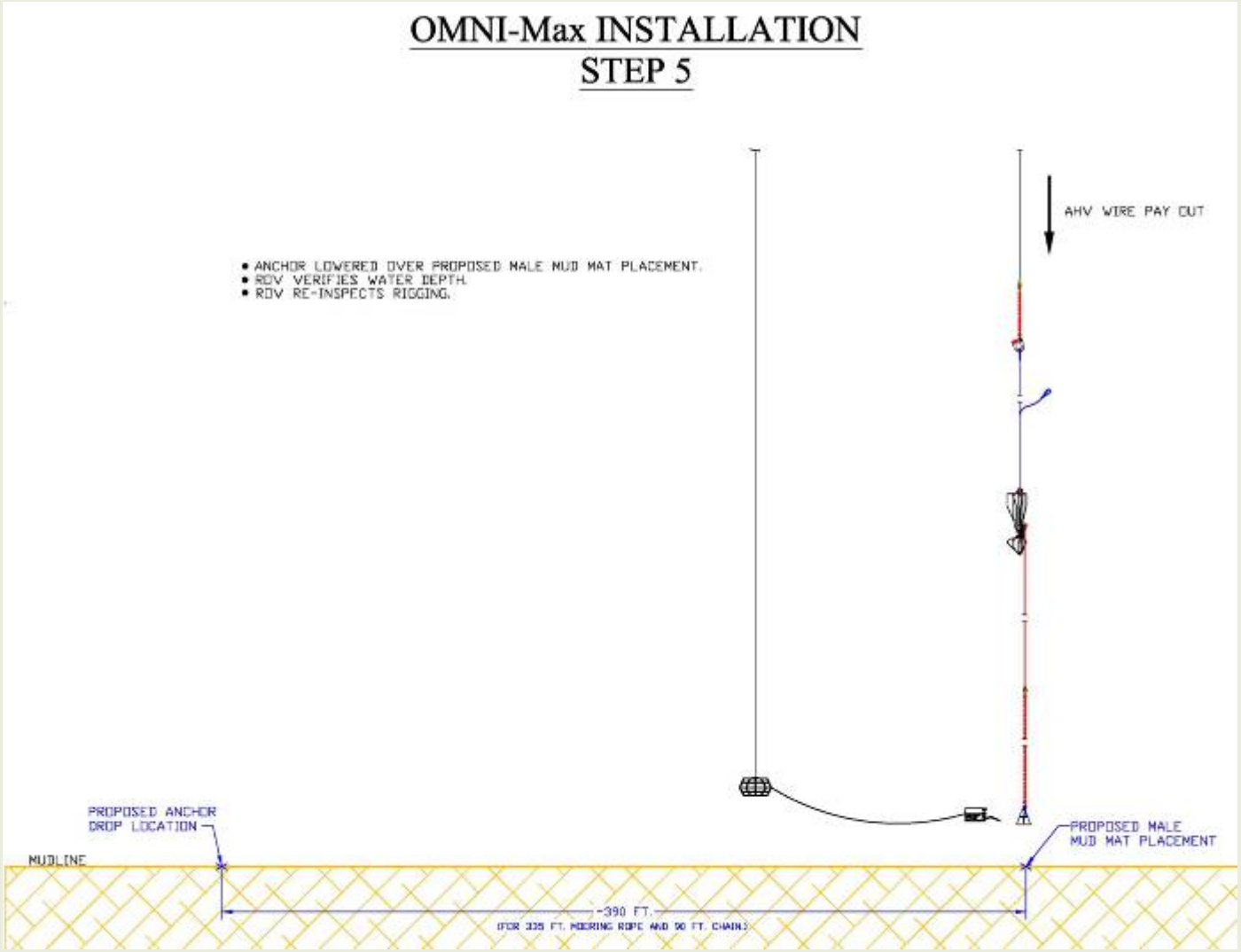

OMNI-Max™ Installation

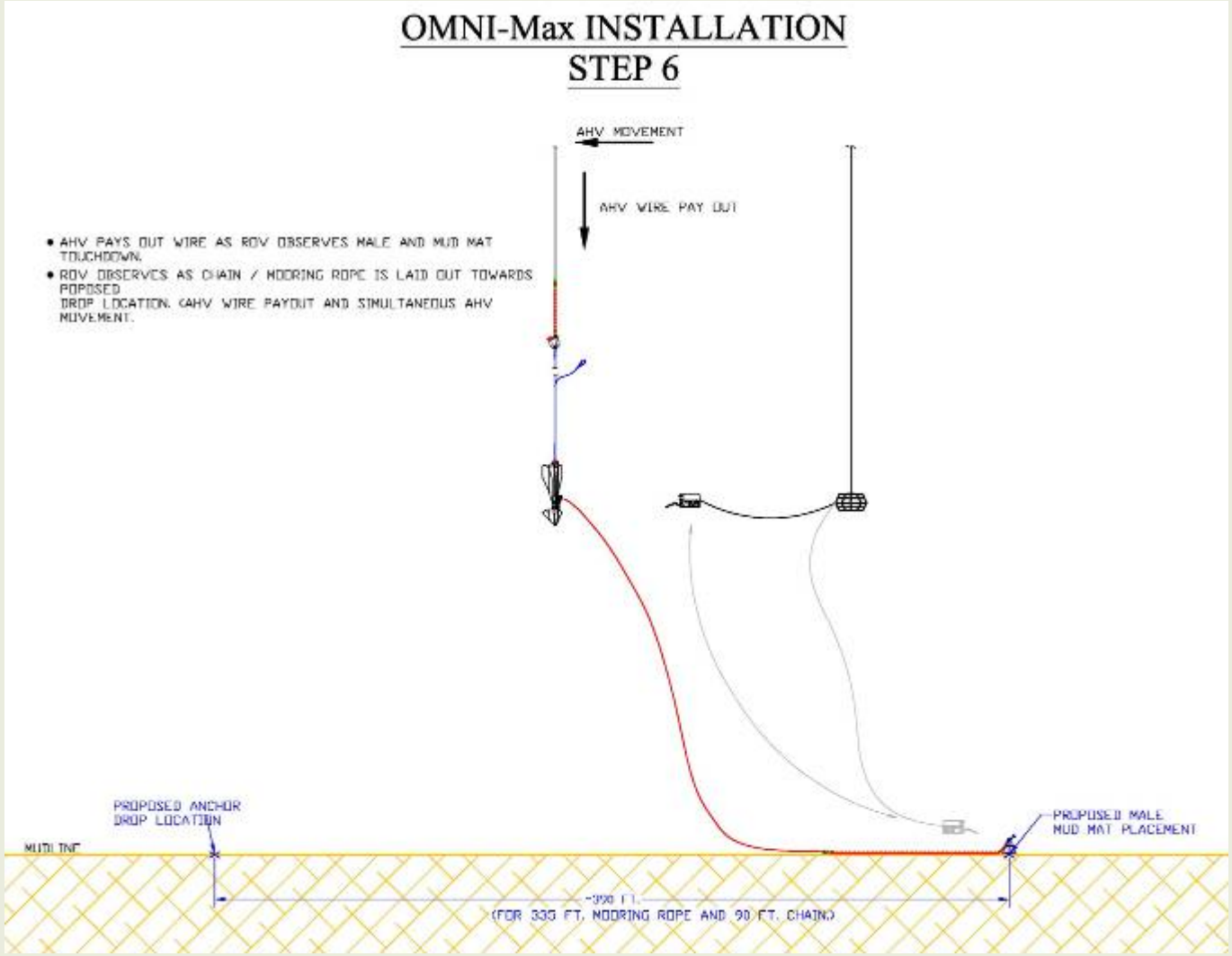

OMNI-Max™ Installation

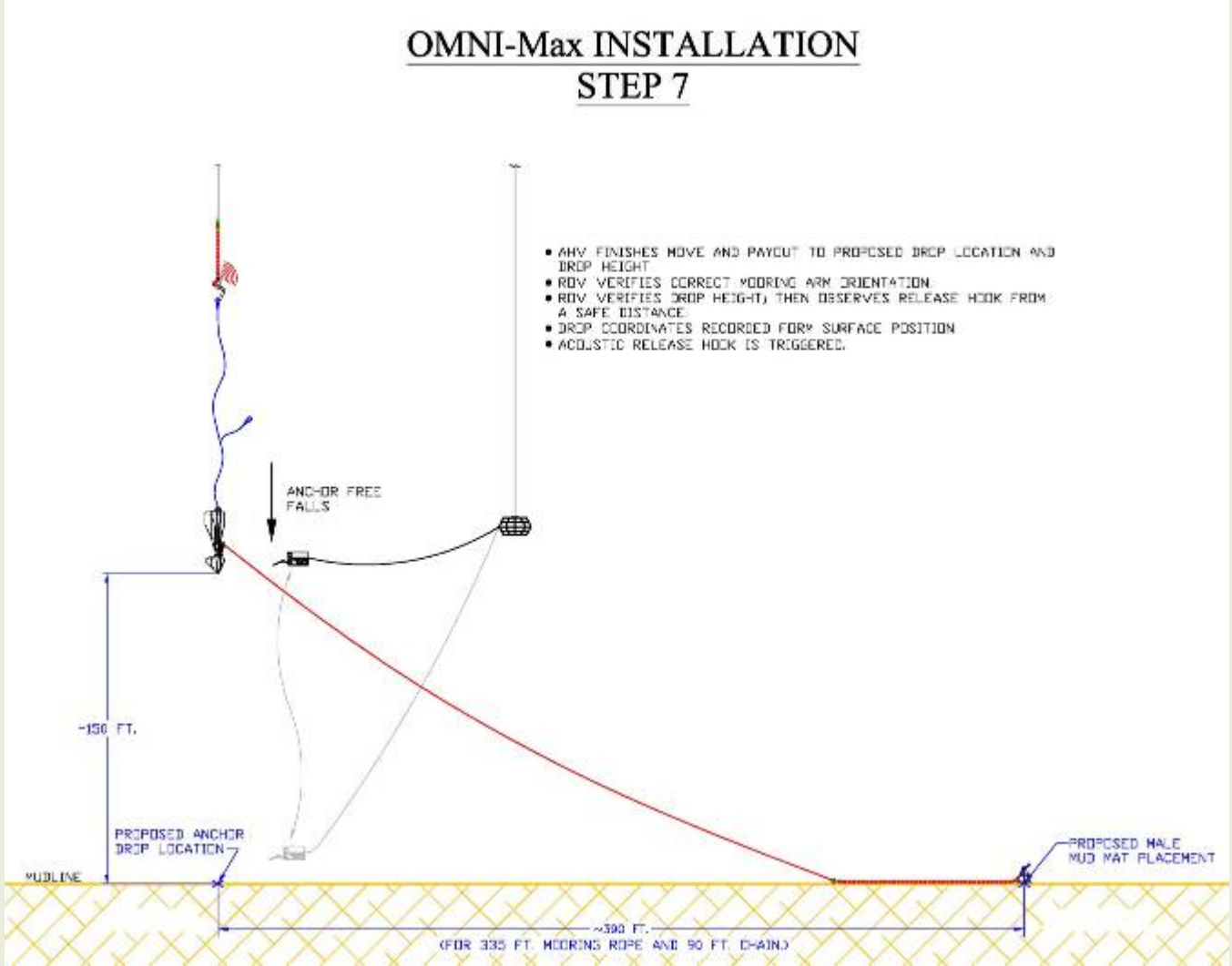

OMNI-Max™ Installation

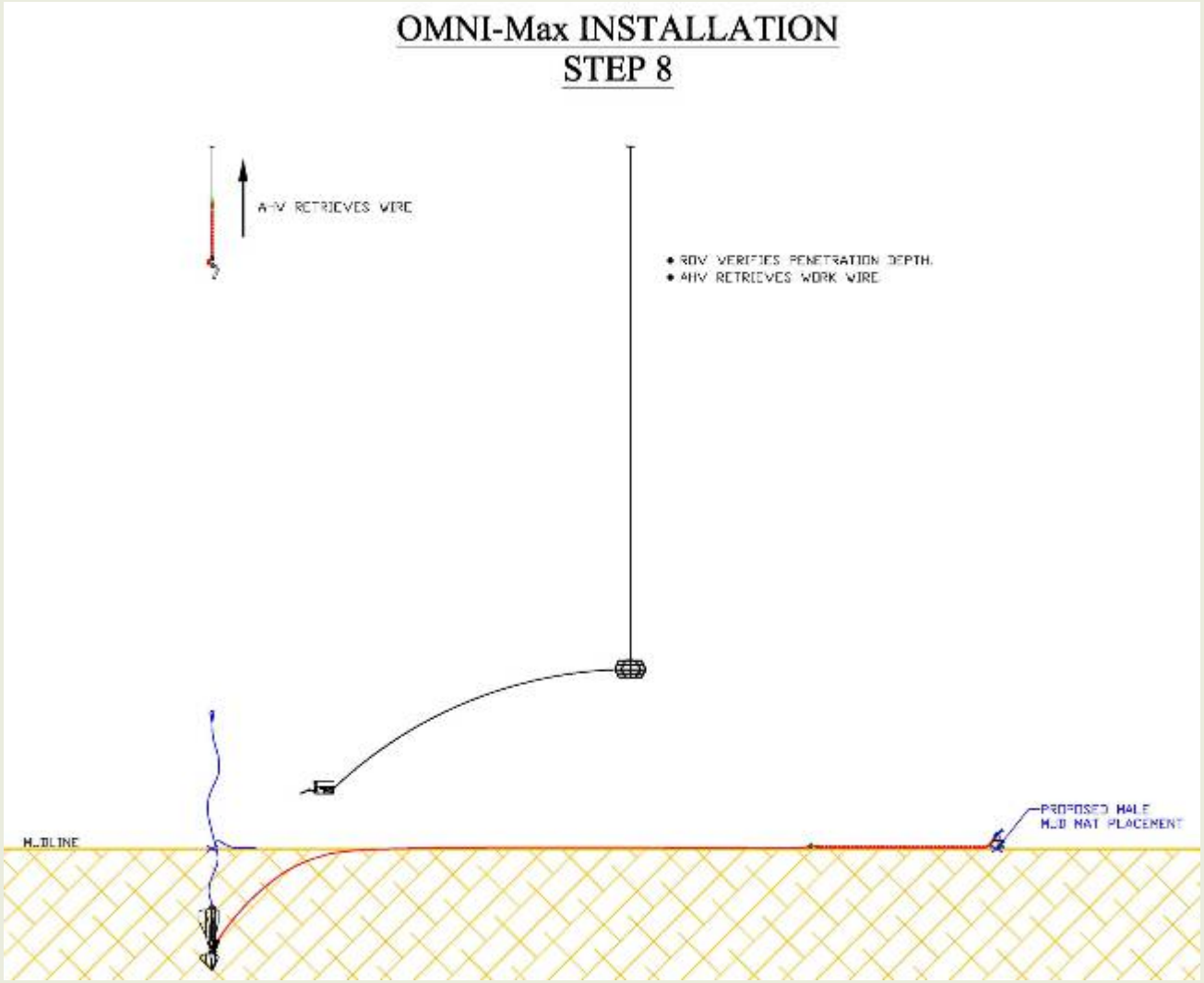

OMNI-Max™ Connected Survival

Fairlead Angle (Deg)	Grounded Length (ft)	Anchor Angle (deg)
49.2	0	28.5
Anchor Distance (ft)	**Anchor Tension (kips)**	**Total Stretch (ft)**
7073	237	49.7

Horizontal Bollard Pull

Kips	208.17
MT	94.43

Graph

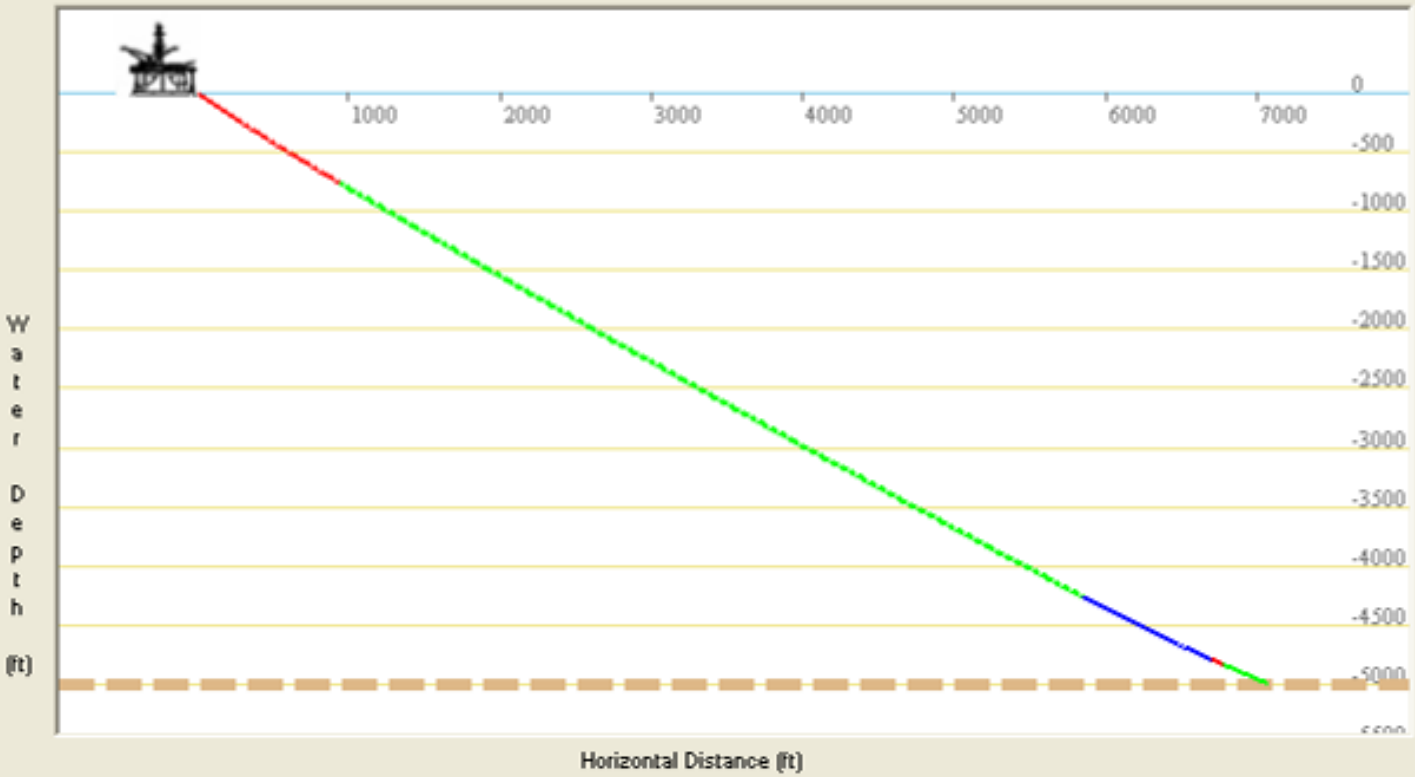

OMNI-Max™ Pattern

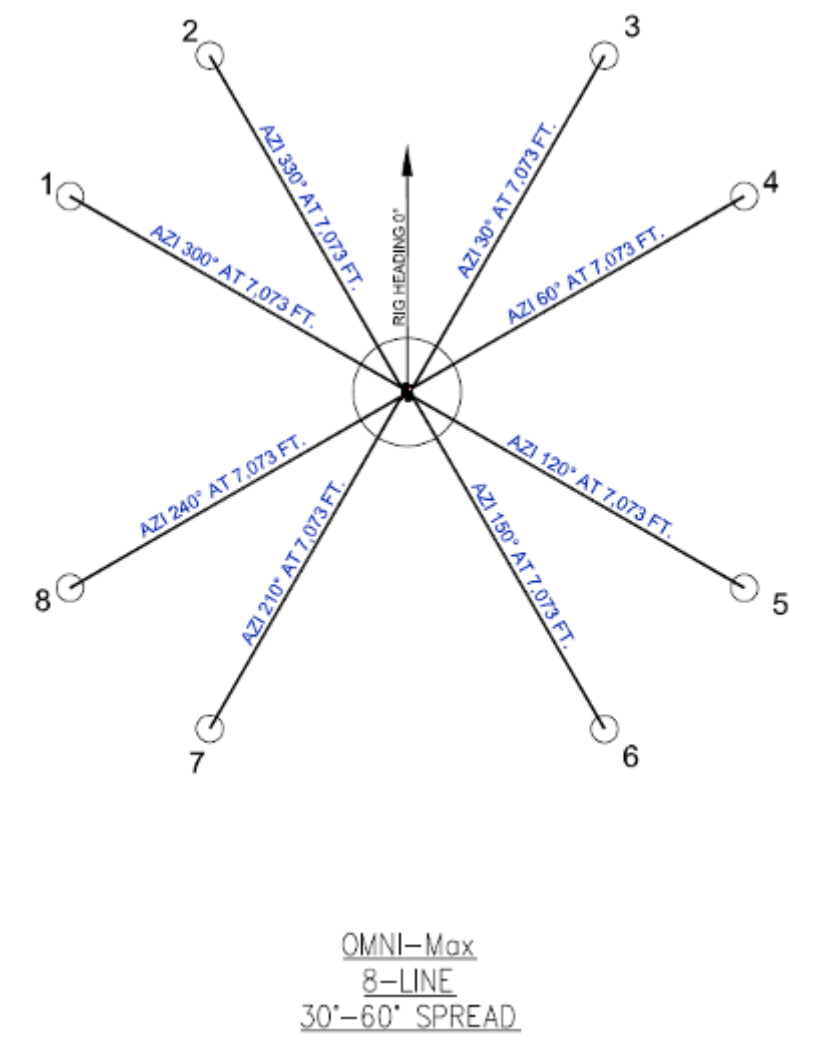

Suction Pile Installation

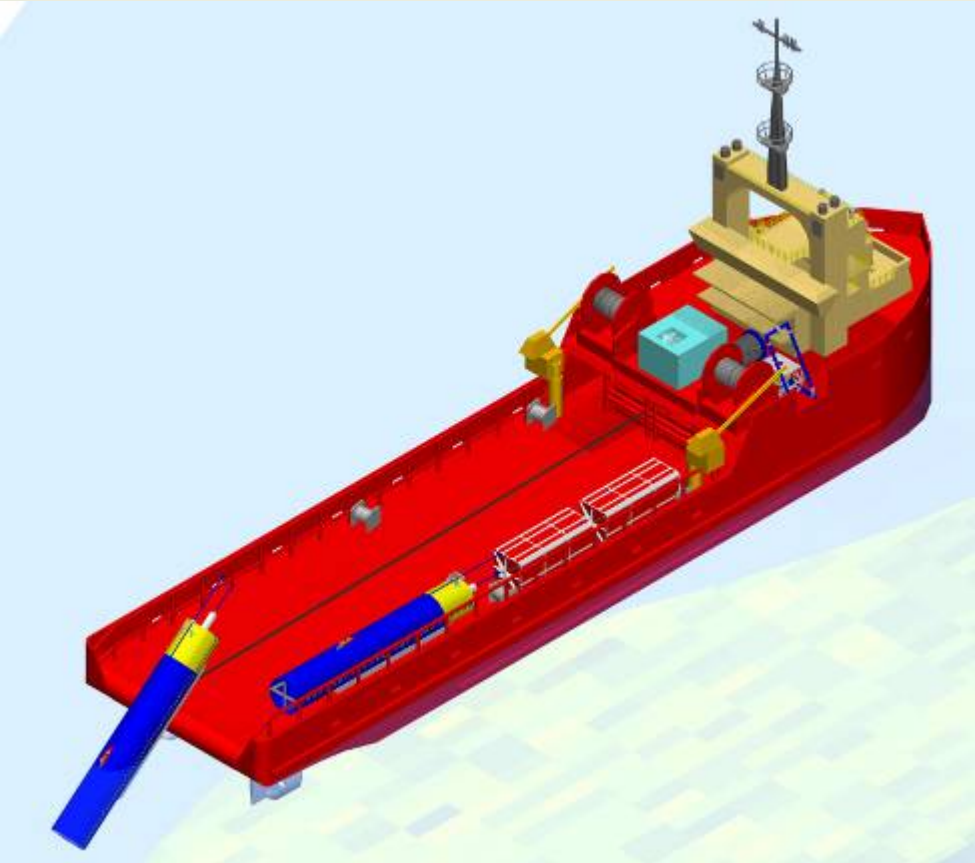

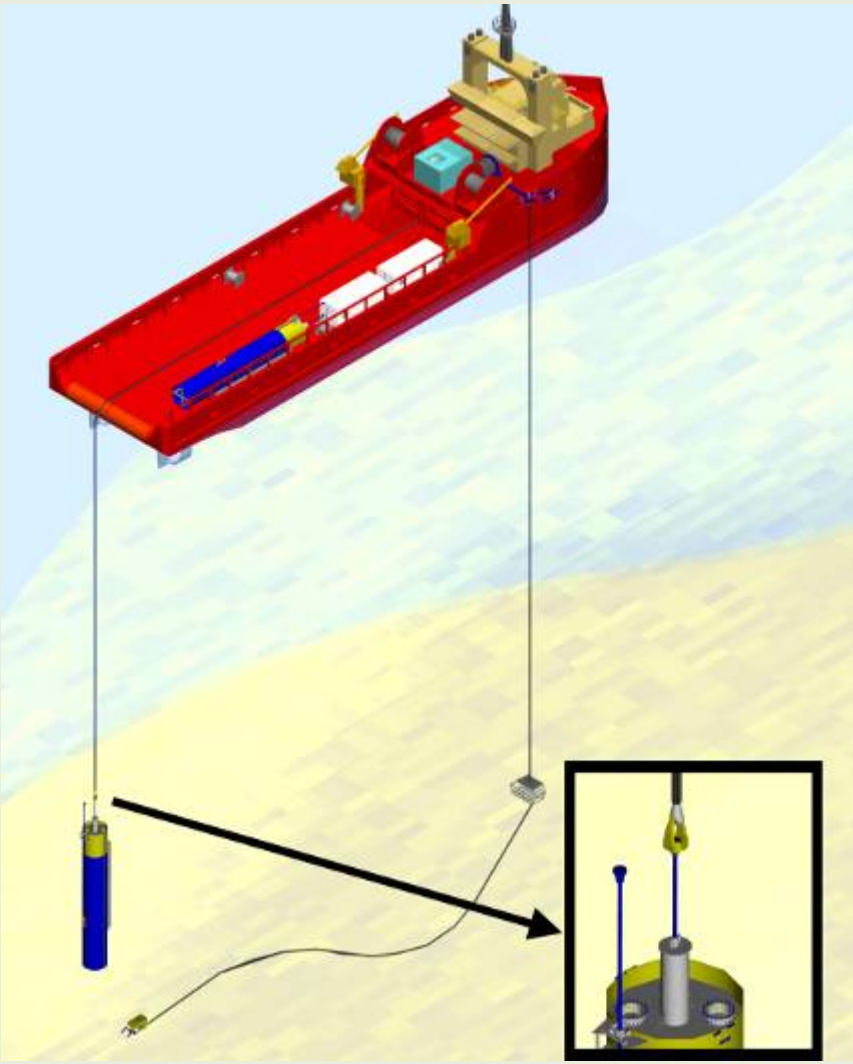

Suction Pile Installation

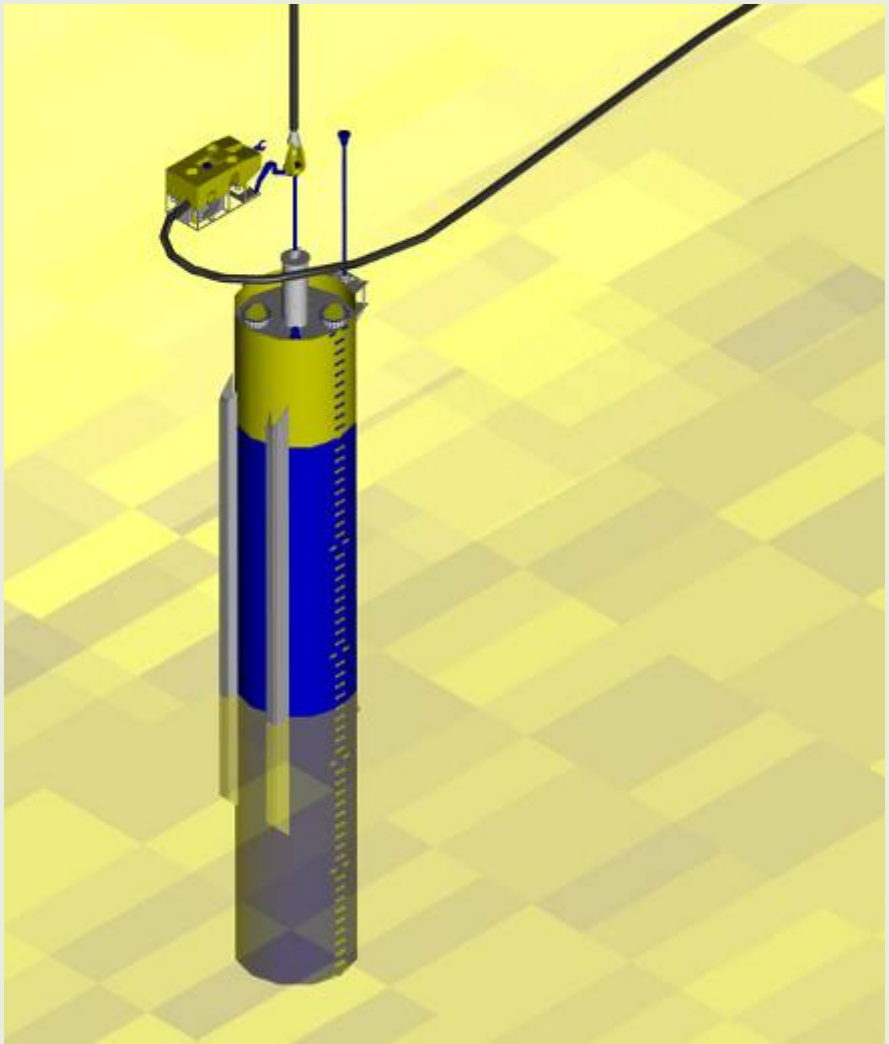

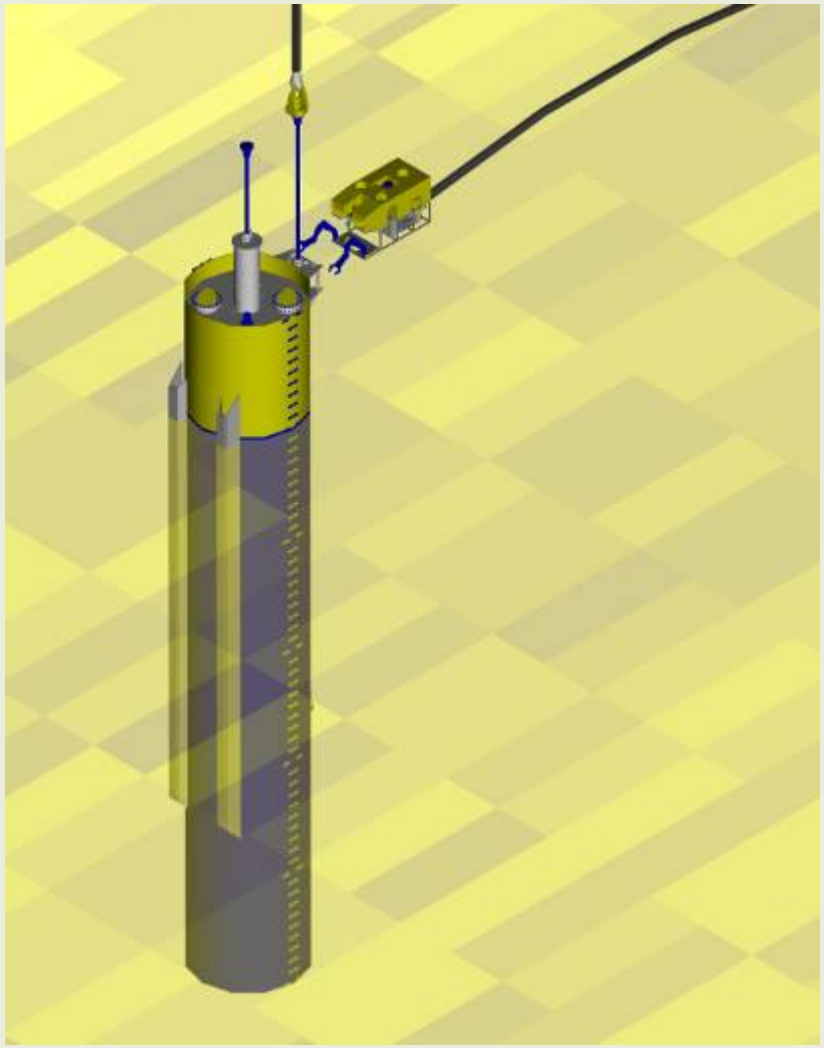

Suction Pile Installation

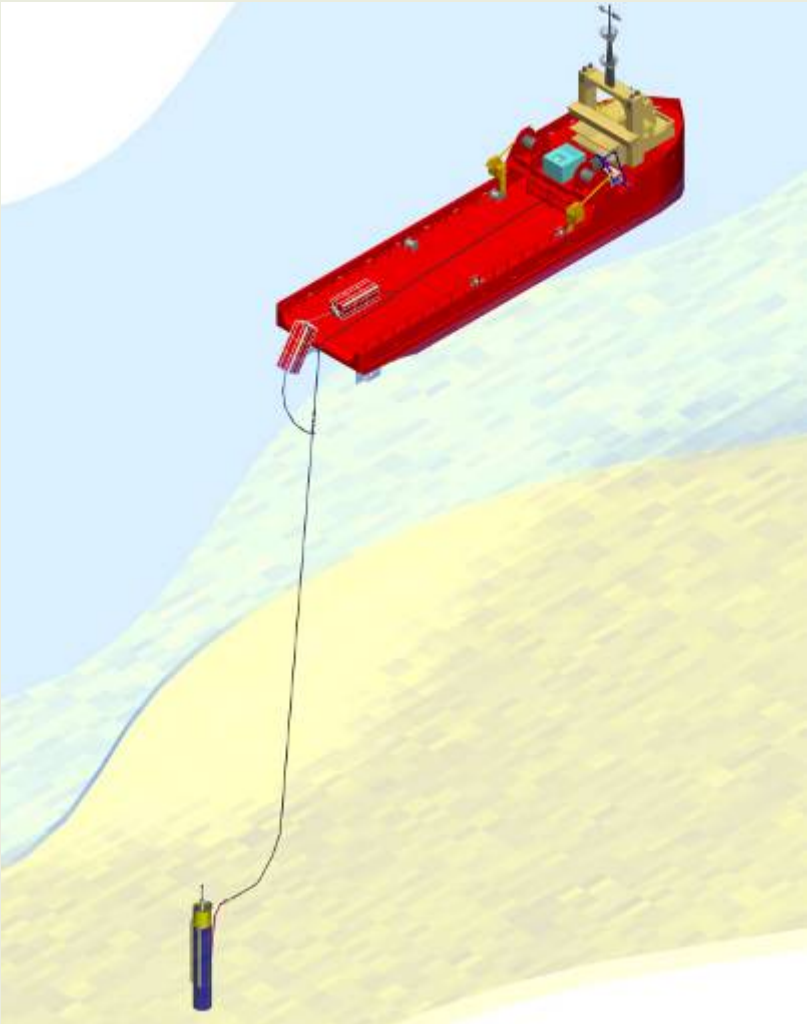

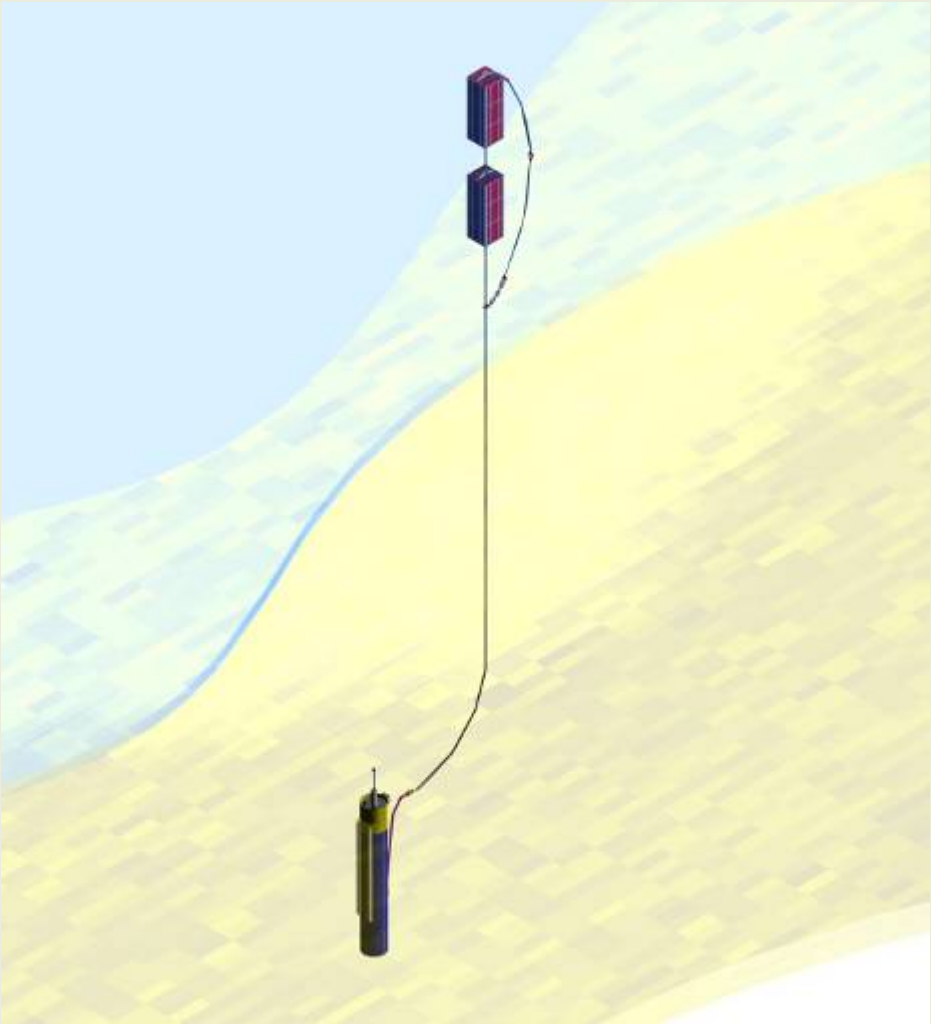

Suction Pile Connected Survival

Fairlead Angle (Deg)	Grounded Length (ft)	Anchor Angle (deg)
51	0	23.8
Anchor Distance (ft)	**Anchor Tension (kips)**	**Total Stretch (ft)**
7766	234	50

Horizontal Bollard Pull

Kips	213.72
MT	96.94

Graph

Suction Pile Pattern

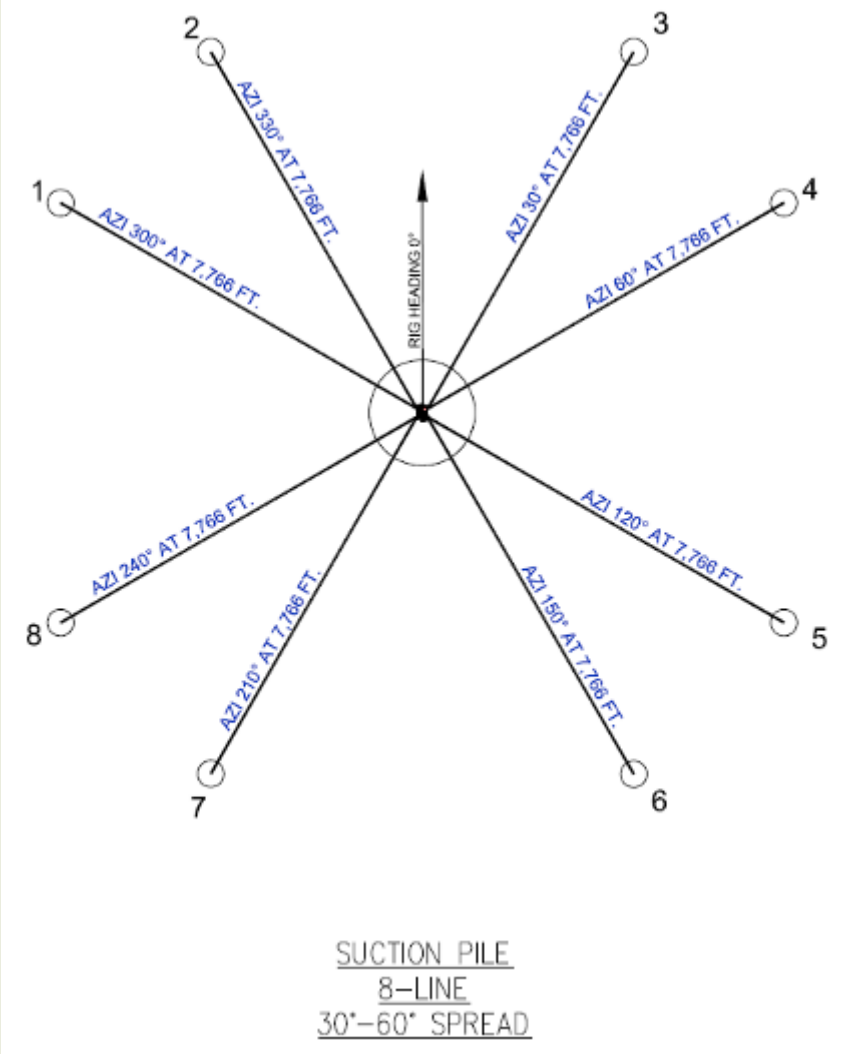

Seafloor Interface

Installation of Anchors

Drag Embedment Anchors

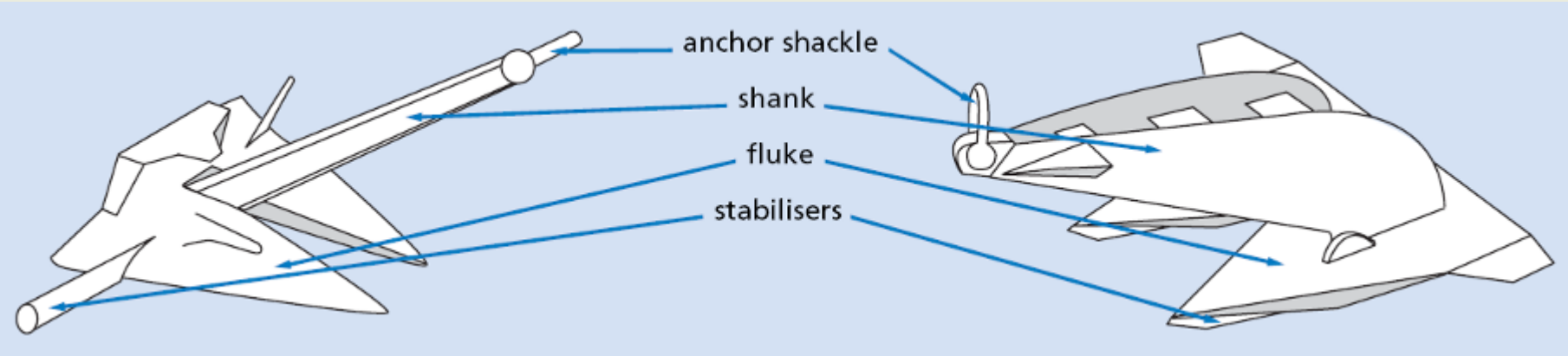

Drag Embedment Anchor (DEA)

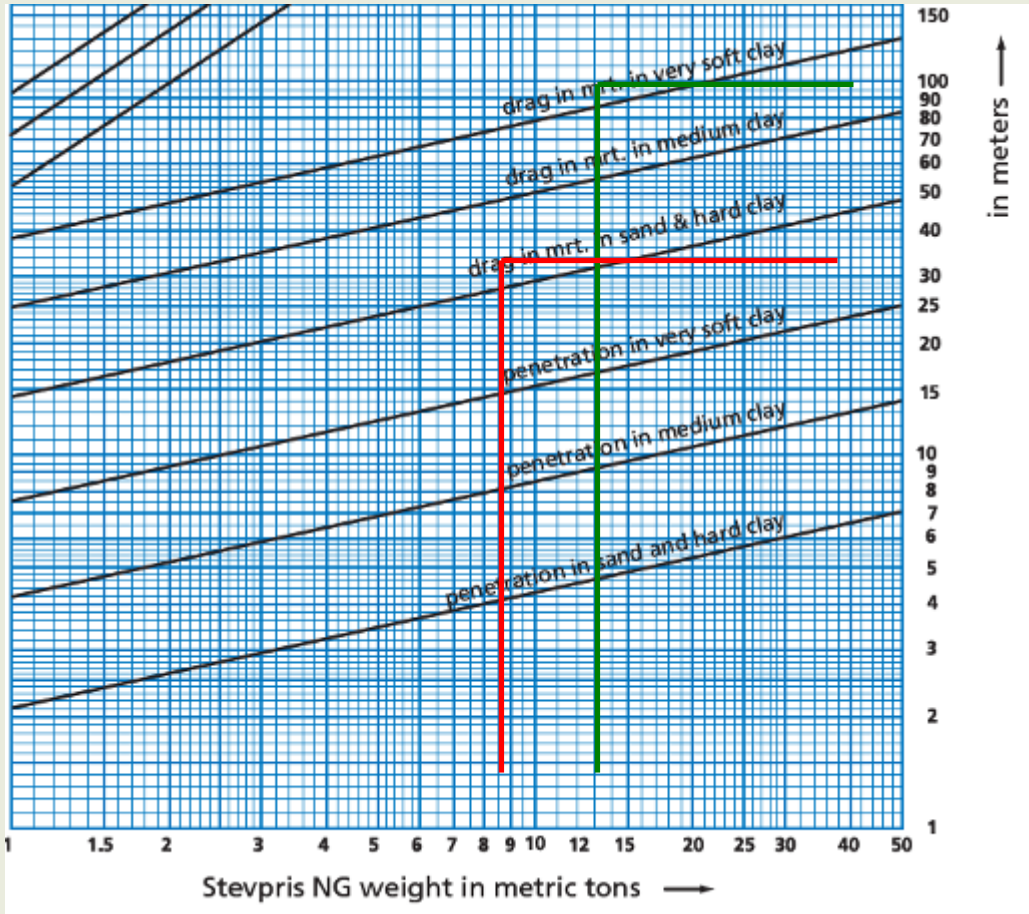

- Typical DEA size 10mt to 15mt
- Anchor Drag (typical)
  - Drag distance range ~30 to 95m (at UHC)
  - Anchor setting ~15m drag
- Anchor Penetration (typical)
  - Fluke tip range ~4 to 18m
  - Anchor setting ~1 to 10m

DEA Seafloor Impact

DEA Seafloor Impact

DEA Seafloor Impact

Suction Pile Anchors

Suction Pile Seafloor Impact

- **12’ x 60’ Pile**
  - **55’ penetration**
  - **~1.5” wall thickness**
- **9.55’ x 70’ Pile**
  - **65’ penetration**
  - **~1” wall thickness**

Suction Pile Seafloor Impact

Suction Pile Seafloor Impact

Drag-Installed VLAs

Drag-Installed VLA Seafloor Impact

- ~12’ x 12’ plate
- Typical Installation
  - Drag ~50’
  - Penetration ~20’

Drag-Installed VLAs

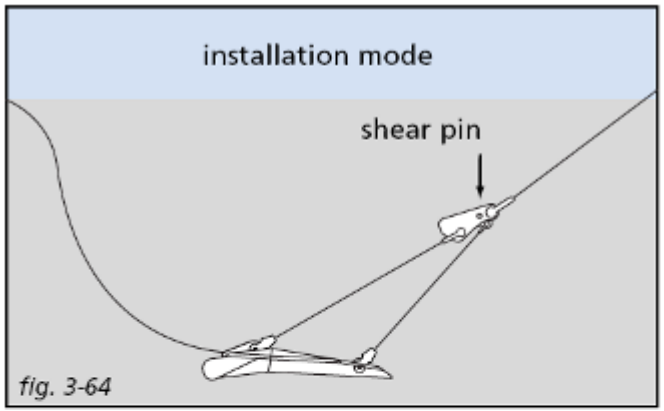

fig. 3-64

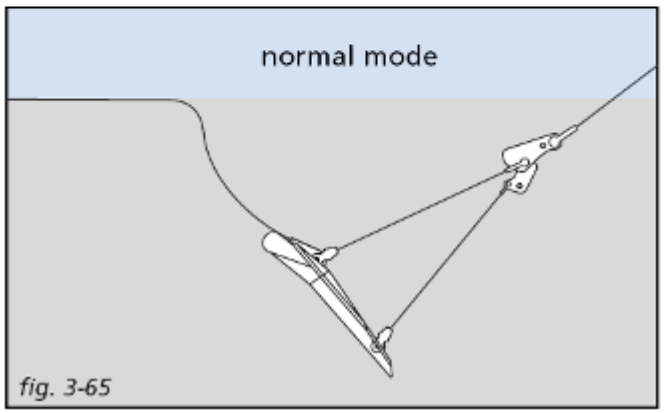

fig. 3-65

OMNI-Max™ Anchor

OMNI-Max™ Seafloor Impact

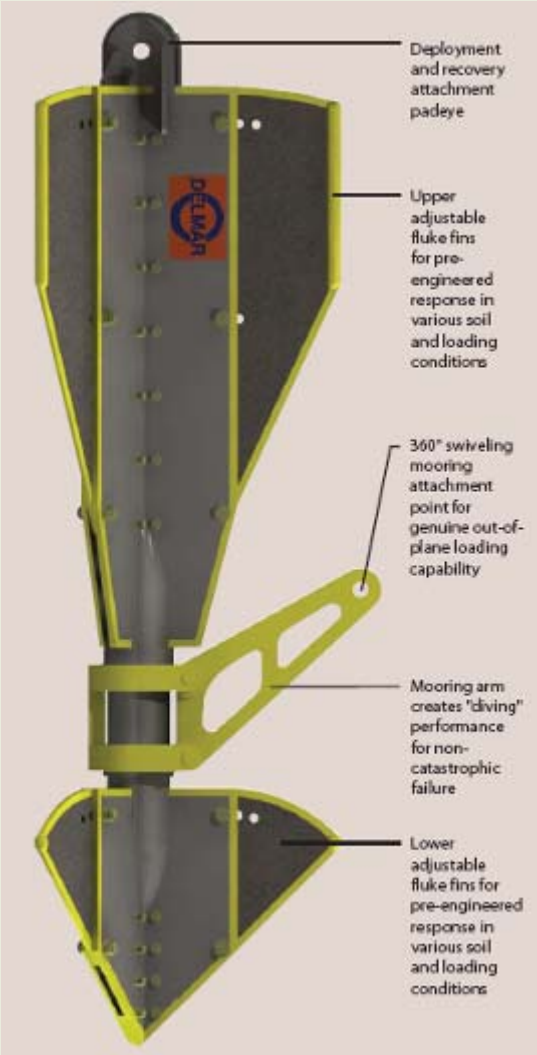

- **30’ long by ~9’ wing span**
- **Installation**
  - **Drop height ~150’ to 250’**
  - **Penetration to ~50’**

OMNI-Max™ Seafloor Impact

OMNI-Max™ Seafloor Impact