# HIPPS Application in the Gulf of Mexico

**Christopher Lindsey-Curran**
**BP Senior Subsea Engineer**

# Agenda

- Introduction and background
- HIPPS overview
- Codes and standards
- System design
- Regulatory issues
- Conclusions

# Introduction

- Subsea HIPPS only installed in North Sea
- GOM seeing increasing reservoir pressures and temperature in deep water
- No regulatory framework in GOM
- Presentation covers:
  - Key differences
  - Impact on subsea architecture
  - Work with regulatory authority

# Background

- BP gap analysis in 2004 for XHPHT identified HIPPS as a key enabling technology
- Thunder Horse experience
- Impacts to other HPHT projects
- Impact of increased water depth on systems
- Impact of high flow rate wells
- Lack of clear position by MMS

# Background (cont.)

| Project | Operator | Location | Fluid | Installation |
|---|---|---|---|---|
| Kingfisher | Shell | North Sea | Gas | 1997 |
| Gullfaks | Statoil | North Sea | Oil/Gas | 2000 |
| Penguins | Shell | North Sea | Oil | 2002 |
| Juno | BG | North Sea | Gas | 2002 |
| Kristin** | Statoil | North Sea | Gas | 2005 |
| Rhum** | BP | North Sea | Gas | 2005 |

** Kristin and Rhum designed to IEC requirements

- GOM is different from the North Sea
  - North Sea projects do not perform routine subsea valve leak tests (routine annual maintenance shutdown only)
  - Regulatory approval based on safety cases

# Benefits of HIPPS

- Reduce topside pressures
- Reduce flowline and riser wall thickness
- Reduced offshore welding time
- Reduced temperature induced axial force
- Improved riser design
- Potential to use existing, lower pressure flowlines and risers

# Risk Reduction

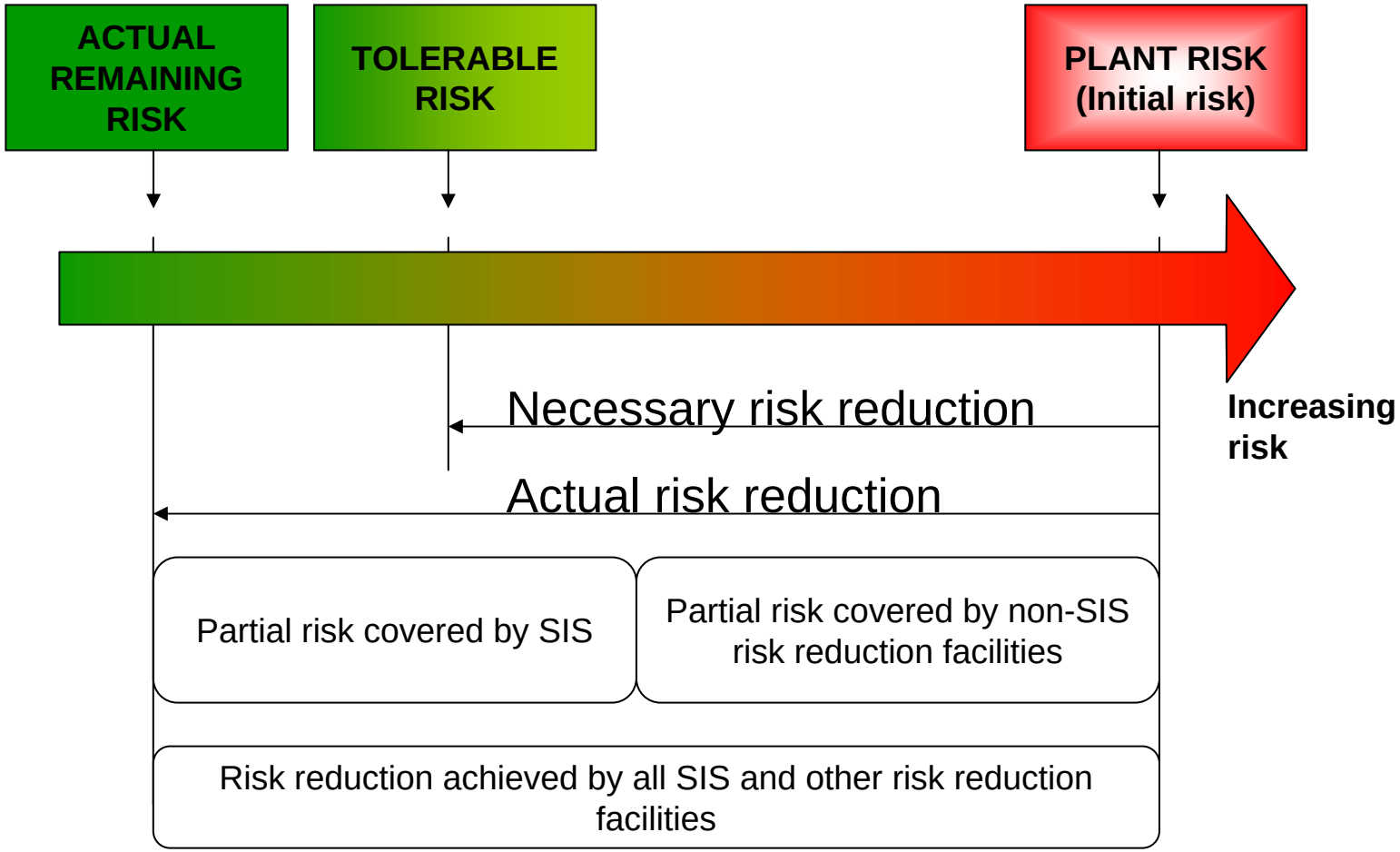


ANSI/ISA-84.00.01-2004 Part 3 (IEC 61511-3 Mod)

# HIPPS Components

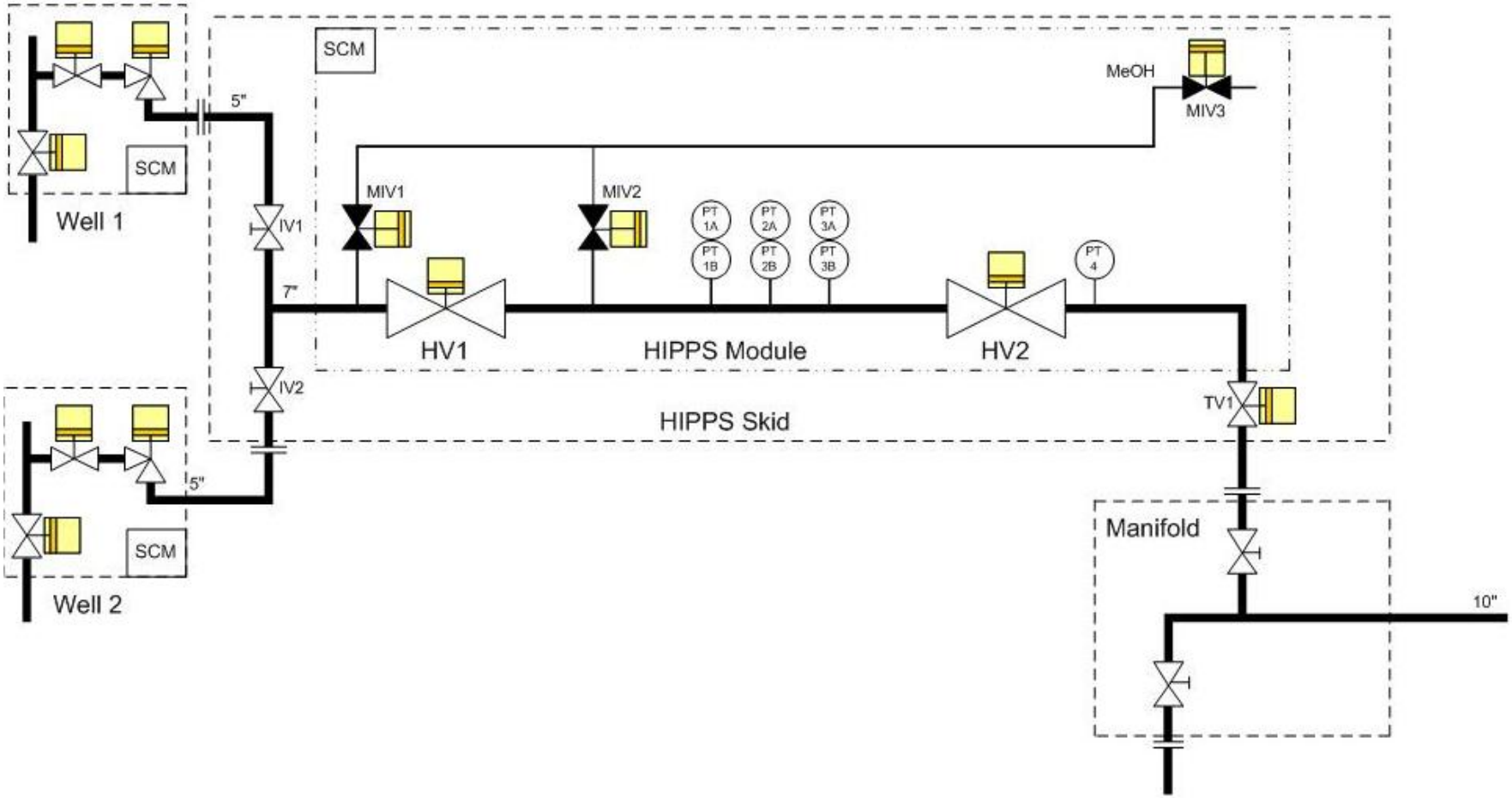

# Flowline Design

- **No yield** – The pipeline is designed not to yield if it sees SITHP in the event of HIPPS failure. Hence pipeline should not be damaged by the HIPPS failure.

- **No burst** – The pipeline is designed to yield but not burst if it sees SITHP in the event of a HIPPS failure. Hence a HIPPS failure may cause permanent deformation of the pipeline requiring extensive inspection, fitness-for-purpose assessment and possible repairs before the pipeline could be brought back into service.

- **Burst critical** – The pipeline design pressure is defined as marginally above the HIPPS trip pressure and hoop stress is limited to some percentage of yield strength at this pressure. In the event of a HIPPS failure the pipeline will yield and subsequently burst. This approach is sometimes referred to as “burst critical.”

# Riser Design

- Safety margin to be comparable to conventional
- Fortified riser and approach
- Apply Structural Reliability Assessment (SRA)

# Fortified Zone

- Located downstream of HIPPS
- Protection for manned intervention at wells / manifold
- Hydrate risk

# Codes and Standards

- GOM based on proscriptive approach
- IEC 61508 & 61511 (risk based approach) – ISA 84
- API 14C (traditional approach)
- Recommendation
  - “use API RP 14C, or better ISO 10418, as the basis for initial design with IEC 61511 used for subsequent analysis”
- API 17O - HIPPS

# System Design for HPHT GOM

- 15,000 and 20,000 psi systems
- Work on gap closure for 20,000 psi (valves, actuators, sensors)
- Assumed 20,000 barrels per day per well
- Deep water – oil predominates to date

# Example Field Layout

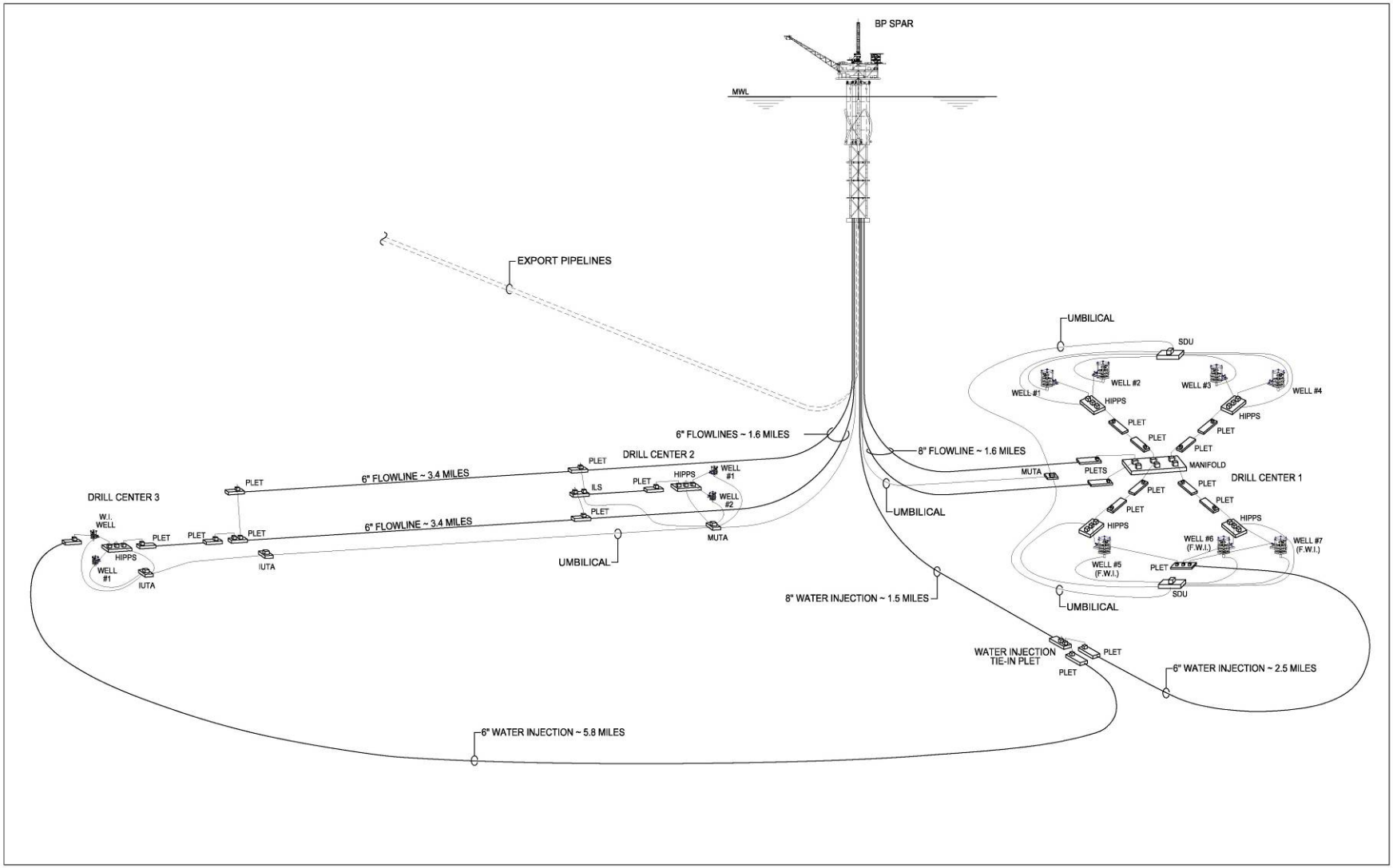

# Status of HIPPS Design

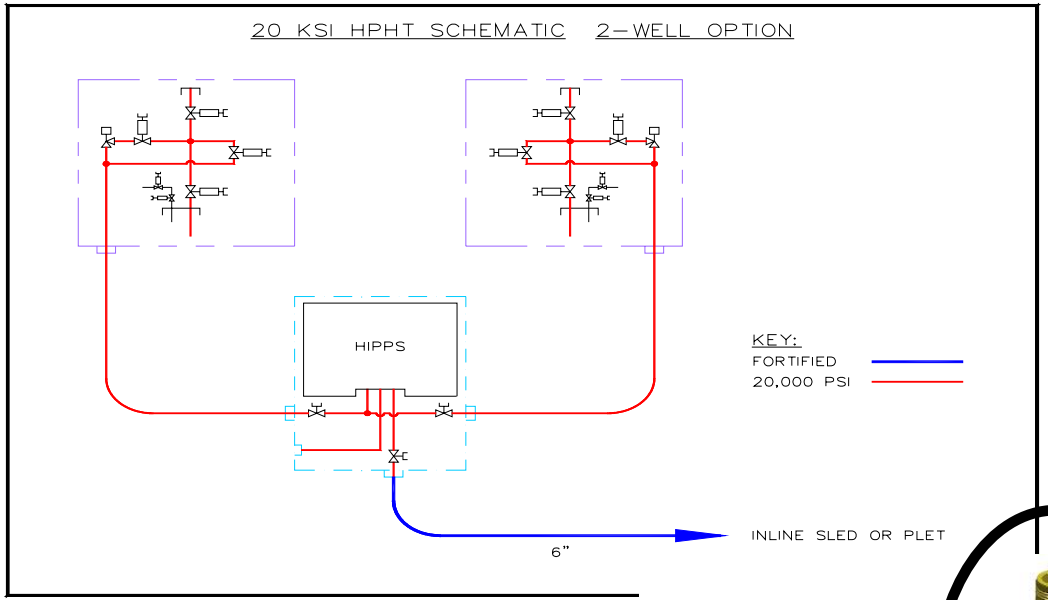


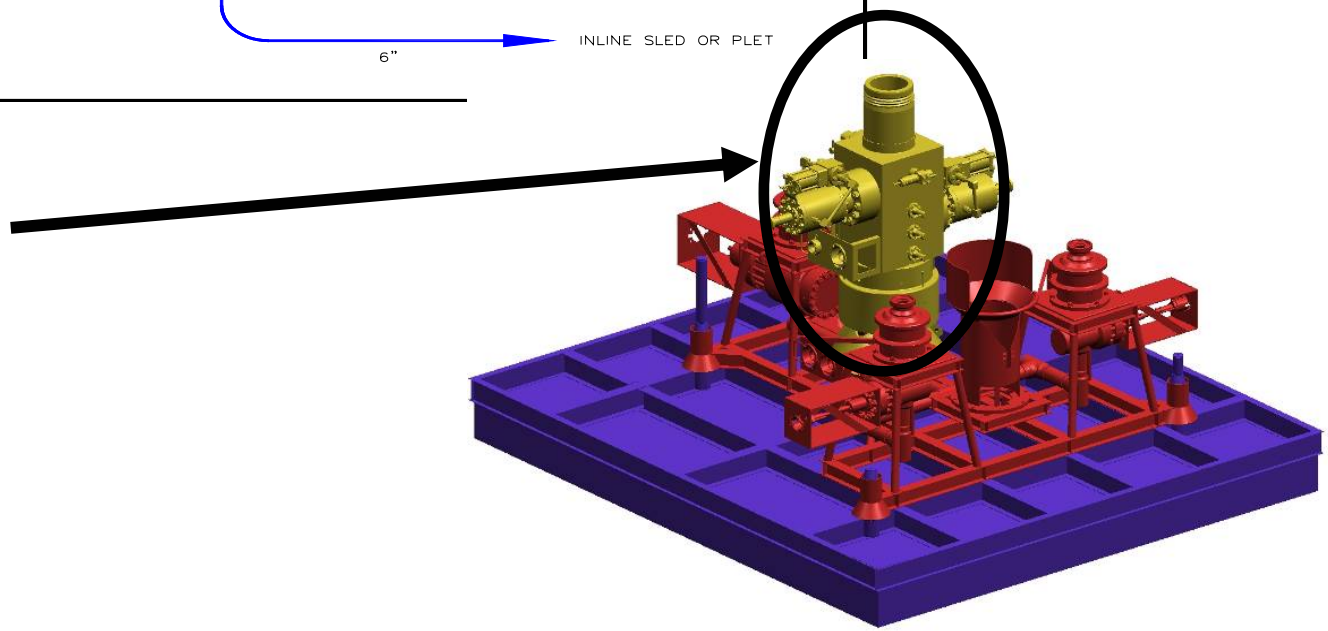

# Regulatory Issues

- Unknown requirements leading to HIPPS not being selected in a number of projects
- DeepStar regulatory committee
- New technology application

# What is HIPPS? MMS View

High Pressure Wells

Subsea Pumps

SIL 3 system with two valves

Designed to be tested to zero leakage (some leakage will be tolerated due to the inclusion of the surface PSV)

HIPPS could be mounted on the tree, Jumper or manifold

No burst zone designed to allow sufficient time for the HIPPS valves to close

Flowline could be designed as burst critical

Fortify zone designed to protect the host

Designed to ensure that the Weak Section fails before the riser

A PSV, rated to 200 scfm or equivalent, is included to prevent valve leakage over pressurizing the system during platform abandonment

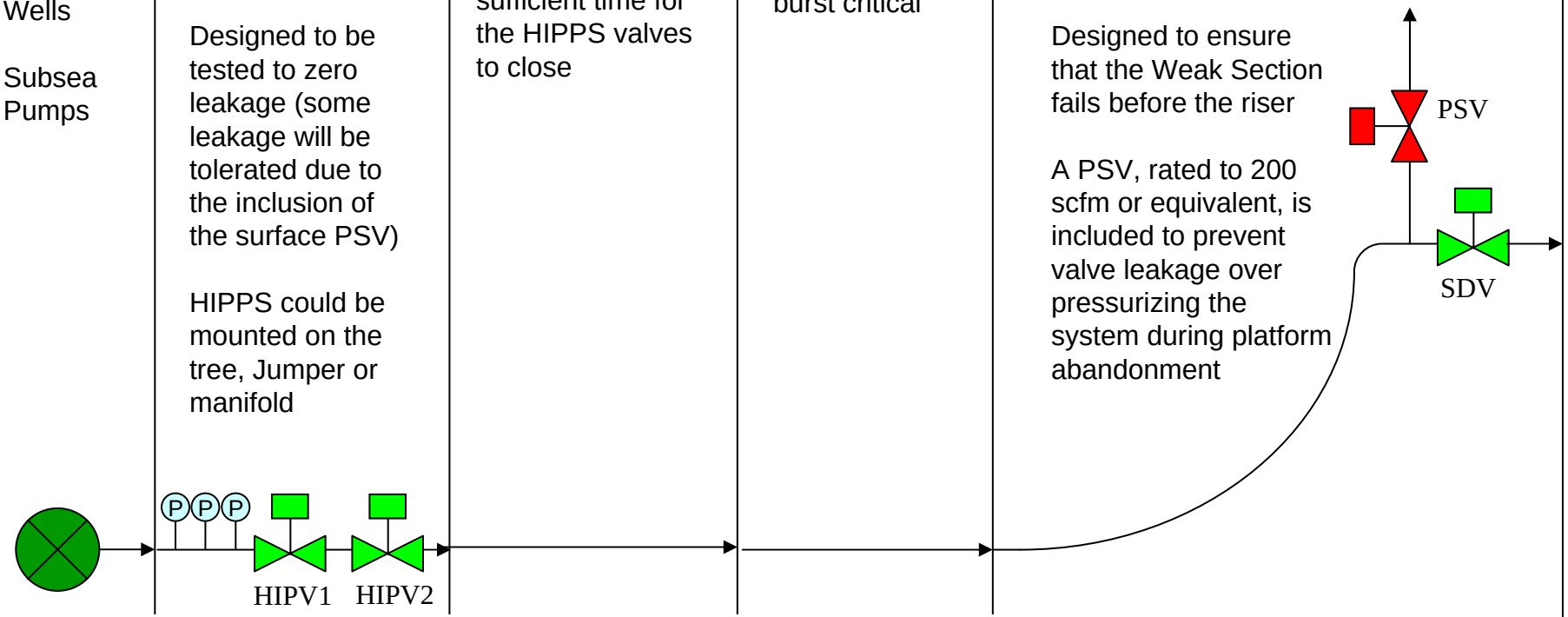


Source | HIPPS | Fortified Zone | Weak Sect'n | Host Fortified Zone

Equipment Under Control

# Industry Leading Position with MMS

- MMS is presently working with industry to develop guidelines (e.g., Deepstar & API 17O)
- MMS plans to use the DWOP process to approve a HIPPS project
- MMS already approves high pressure shelf wells that utilize low pressure flowlines (CFR250.803, API 14C)
- BP submitted NTA March 2006, approved July 2006

# Conclusions

- Systems available for 15,000 psi
- Brown field developments will be first application
- HIPPS is an enabling technology for deep water HP
- Regulatory position is now well understood